Naval Research Laboratory

Washington, DC 20375-5320

NRL/PU/6115- -99-384

Groundwater Circulating Well Technology Assessment

ARCADIS Geraghty & Miller
Santa Barbara, CA

Air Force Research Laboratory
Air Base and Environmental Technology Division
Tyndall Air Force Base, FL

Battelle Memorial Institute
Environmental Systems and Technology Division
Columbus, Ohio

Chemical Dynamics and Diagnostics Branch
Chemistry Division

May 31, 1999

ESTCP
Environmental Security Technology Certification Program

Naval Research Laboratory
Environmental Quality Sciences

Approved for public release; distribution is unlimited.

CONTENTS

LIST OF FIGURES ..... **IV**

LIST OF TABLES ..... **IV**

DISCLOURE ..... **V**

LIST OF ABBREVIATIONS ..... **V**

1.0 INTRODUCTION **1**

2.0 OVERVIEW OF GCW TECHNOLOGY **2**

2.1 SUMMARY OF GCW 2
2.2 GCW PROCESSES AND CONFIGURATIONS 4
2.3 APPLICABILITY OF GCW 7

3.0 VENDORS AND CASE HISTORIES **16**

3.1 VENDORS 16
3.2 VENDOR CASE HISTORIES 19
3.3 DETAILED DoD CASE HISTORIES *22*

4.0 DISCUSSION OF GCW LIMITATIONS **52**

4.1 RECIRCULATION 52
4.2 PROVING RECIRCULATION 53
4.3 IN-WELL PROCESSES 56

5.0 TECHNOLOGY ASSESSMENT **59**

5.1 ADVANTAGES AND DISADVANTAGES 59
5.2 LIMITED APPLICATION 61
5.3 RESEARCH AREAS 62

6.0 SITE SCREENING **65**

7.0 REFERENCES **70**

7.1 REFERENCES CITED 70
7.2 REFERENCES CONSULTED BUT NOT CITED 72

LIST OF FIGURES

Figure 1 Idealized Circulation Pattern Around a GCW System 3
Figure 2 Schlematic of the Wasatch Environmental, Inc. Density Driven Convection GCW System 46
Figure 3 Schematic of the MACTEC Standard NoVOCs Groundwater Circulating Well Systems 47
Figure 4 Schematic of the MACTEC Confined Aquifer NoVOCs Groundwater Circulating Well System 48
Figure 5 Schematic of the IEG Technologies Standard Circulation UVB Groundwater Circulation Well System 49
Figure 6 Schematic of the IEG Technologies Biological Treatment Groundwater Circulating Well System 50
Figure 7 Schematic of KV Associates C-Sparge Groundwater Circulating Well System 51
Figure 8 Conceptual Diagrams Showing Effects of Anisotropy on GCW Circulation Geometry 64

LIST OF TABLES

Table 1 Solubilities, Henry's Law Constant (H), and Kow Values for Some Common Organic Contaminants 9
Table 2 Case Histories Grouped by Contaminant Class 19
Table 3 GCW Vendor Provided Case History Data 21
Table 4 Statistics from Table 3 Data 22
Table 5 Closure Statistics from Case Histories 22
Table 6 Generalized Applicability of GCW Technology 66

DISCLOURE

The opinions and assertions contained herein are those of the authors and are not to be construed as official or reflecting the views of the Departments of Defense or other agencies of the U.S. government. The use of trademark or brand names is incidental and not intended to endorse their use or exclusion.

LIST OF ABBREVIATIONS

AFB	Air Force Base
AFCEE	Air Force Center for Environmental Excellence
bgs	below ground surface
BOD	biological oxygen demand
BTEX	benzene, toluene, ethylbenzene, and xylenes
CMS	corrective measure study
COD	chemical oxygen demand
C.V.	coefficient of variance
DCA	dichloroethane
DCB	dichlorobenzene
DCE	dichloroethylene
DDC	density driven convection
DNAPL	dense, nonaqueous-phase liquid
DO	dissolved oxygen
DoD	Department of Defense
DoE	Department of Energy
EPA	Environmental Protection Agency
ESTCP	Environmental Security Technology Certification Program
ETR	extract, treat and reinject
GAC	granular activated carbon
GC	gas chromatograph
GC/MS	gas chromatograph/mass spectrometer
GCW	groundwater circulating well
GMS	groundwater modeling system
HRT	hydraulic residence time

ICE	internal combustion engine
IDW	investigation-derived waste
K	hydraulic conductivity
k	permeability
K_H	horizontal hydraulic conductivity
K_{OW}	octanol-water partition coefficient
K_V	vertical hydraulic conductivity
LANTDIV	Naval Facilities Engineering Command, Atlantic Division
LD_{50}	dose resulting in 50% kill
LEL	lower explosive limit
LNAPL	light, nonaqueous-phase liquid
MBW	modified bioventing well
MCL	maximum contaminant level
MEK	methyl ethyl ketone
MIBK	methyl isobutyl ketone
MMOC	modified method of characteristics
MOC	method of characteristics
NRL	Naval Research Laboratory
OD	outside diameter
ORP	oxidation/reduction potential
OU	Operable Unit
PAH	polycyclic aromatic hydrocarbon
PCB	polycyclic biphenyl
PCE	perchloroethylene
PEL	permissible exposure limit
PVC	polyvinyl chloride
RCRA	Resource Conservation and Recovery Act
ROI	radius of influence
SAR	sodium adsorption ratio
SCAQMD	South Coast Air Quality Management District
SERDP	Strategic Environmental Research Development Program
SF_6	sulfer hexaflouride
SITE	Superfund Innovative Technology Evaluation
SVE	soil vapor extraction

SVOC	semi-volatile organic compound
SWMU	solid waste management unit
TCA	trichloroethane
TCE	trichloroethylene
TMB	trimethylbenzene
TOC	total organic carbon
TPH	total petroleum hydrocarbon
UFA	Unsaturated Flow Analysis
U.S. EPA	United States Environmental Protection Agency
USGS	U.S. Geological Survey
UST	underground storage tank
UVB	Unterdruck-Verdampfer-Brunnen (vacuum vaporizer well)
VC	vinyl chloride
VOA	volatile organic analysis
VOC	volatile organic compound

1.0 INTRODUCTION

Groundwater circulating wells (GCWs), alternatively known as in-well vapor-stripping, are an in situ remediation technology that integrates the principles of groundwater recirculation with air stripping of volatile organic compounds (VOCs). In theory, GCW represents potential cost savings over traditional pump-and-treat technologies due to in situ treatment.

The concept was initially proposed in the U.S. by researchers at Stanford University (Gvirtzman and Gorelick 1992). The U.S. Department of Energy supported the concept and provided funding for testing the concept and bridging the gap to application. A GCW was first built and tested in the laboratory at the U.S. Department of Energy's Hanford WA Site through a collaboration between Stanford University and Pacific Northwest National Laboratory (Gilmore et al., 1996; Francois et al., 1996). Following the successful demonstration of the system in the laboratory, a field demonstration was installed at Edwards Air Force Base (AFB) in southern California during the summer of 1995 and was the first GCW demonstration at a federal facility.

As of this writing, GCWs have been tested and/or operated at over 50 contaminated private and public sites in the U.S., with mixed results. Few sites have been clear successes and just as many seem to have been clear failures, the preponderance, however, are blurred into the middle, attaining some contaminant reduction but lacking the data to allow for validation of the technology's efficacy. The wide-scale use of GCW seems limited by a general uncertainty and skepticism about the technology's true performance. In the absence of well documented examples of successful demonstrations, the use of GCW technology will likely continue to be limited, at least on federal sites.

The objective of this report is to complete a survey of GCW technology based on demonstrations at a number of federal and public sites documenting the successes and shortcomings of system performance. An additional objective is to document and develop guidelines for the use of the technology and make recommendations for additional data requirements to either support or argue against the use of this technology for particular contaminant and hydrogeologic applications.

Implicit in these objectives is the overall goal of providing guidance to potential users of GCW for their thoughtful evaluation of the technology within the context of their needs and site characteristics, leading, hopefully, to environmentally responsible and cost effective groundwater cleanups.

Lastly, much of the technical GCW process description and case history information is drawn from a document prepared by Battelle Memorial Institute for the Environmental Security Technology Certification Program (ESTCP) in 1998 entitled *Groundwater Circulating Well Assessment and Guidance.*

2.0 OVERVIEW OF GCW TECHNOLOGY

2.1 SUMMARY OF GCW

The current standard for aquifer restoration pump-and-treat technologies have some general limitations associated with the extraction of water from an aquifer. They can require pumping large quantities of groundwater which, if contaminant concentrations in the pumped water exceed regulatory levels, can require further treatment prior to discharge. Common treatment technologies coupled to pump-and-treat systems include aboveground air stripping, activated carbon adsorption, and biological treatment. Treated water can be discharged either to a sanitary or industrial sewer, depending on local permitting requirements. Reinjection to the aquifer may be possible if the treated water meets local regulatory standards and an injection permit is obtained. These permits are often difficult to obtain for reinjection into drinking-water source aquifers.

The major costs of pump-and-treat systems are associated with lifting the water and with the aboveground treatment processes required to achieve stringent treatment levels. At sites with deep groundwater, where large pumps with greater lifting capacities are required, the energy costs associated with lifting the water to the treatment unit can be a significant portion of the remediation cost. On the other hand, the costs associated with aboveground treatment may predominate when large quantities of water are pumped and/or a high degree of treatment is required.

Alternative methods to conventional pumping and treating are being developed that avoid many of these difficulties by providing in situ treatment, thus eliminating the need for groundwater withdrawal and aboveground treatment. Air sparging, enhanced in situ aerobic and anaerobic biodegradation, chemical and biological barrier technologies, and GCWs are examples of such alternatives.

GCW systems attempt to create a 3-dimensional circulation pattern in an aquifer by drawing groundwater to the well, pumping the water through the well, then reintroducing the water into the aquifer at a different level without pumping it above ground. Distinct circulation patterns are established depending on both the operational geometry of the GCW and the hydrogeologic conditions of the site. GCWs can be configured with upward in-well flow or downward in-well flow depending on site requirements. The upward flow is the most typical configuration.

Figure 1 illustrates ideal circulation patterns that would be established with a GCW as a function of horizontal groundwater flow velocities (Herrling et. al., 1991a). Figure 1a shows that under ideal conditions, and in the absence of background groundwater flow, the circulation pattern forms a symmetrical ellipsoid around the well. Figures 1b and c show that as the horizontal component of the background groundwater velocity increases, the streamlines are skewed and the symmetry is lost. By comparing Figures 1b and c, it can be seen that increasing background flow velocities causes a decrease in the radius of the induced GCW flow field. This has a direct impact on the GCW-induced circulation cell and dictates the GCW spacing required for effective system design.

Note that these diagrams illustrate the case of an idealized aquifer in which vertical flow is easily established. As discussed further below (Section 2, 3, and 4), this may not be the case in many real-world situations.

GCW systems are designed to provide treatment inside the well, in the aquifer, or a combination of both. For effective in-well treatment, the contaminants must be adequately soluble and mobile for transport by circulating groundwater. Current methods for in-well treatment include air stripping, activated carbon adsorption, and in-well bioreactors. Contaminants that cannot be mobilized effectively to the well can sometimes be treated in the aquifer. Most commonly, in situ treatment is achieved through biodegradation. Often, there is a combination of both in-well and in-aquifer treatment, with the relative percentages of removal by each mechanism being contaminant-, site-, and GCW configuration-specific.

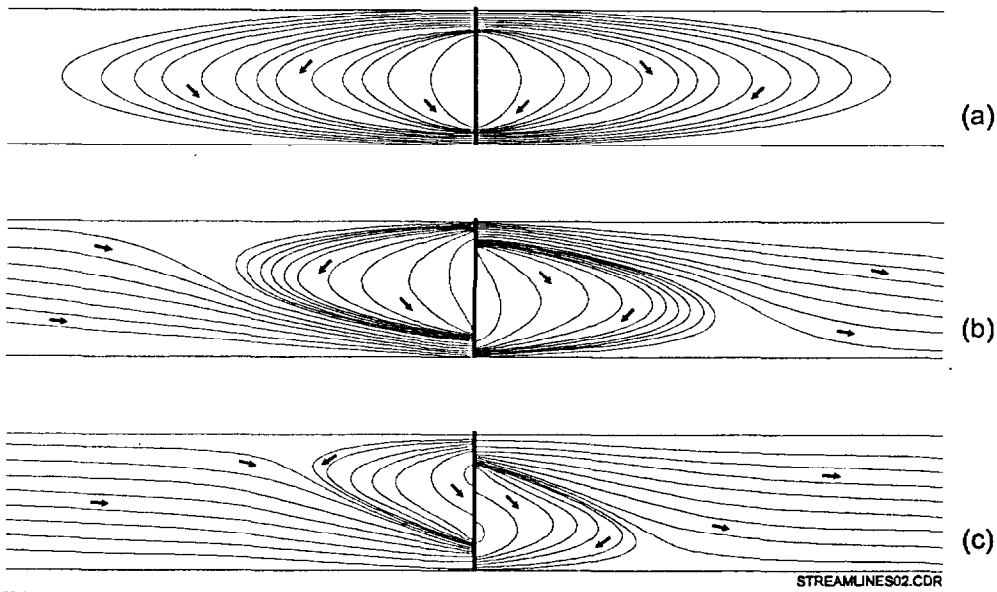

Figure 1. Idealized Circulation Pattern Around a GCW System with Horizontal Groundwater Velocities of (a) 0.0 m/day, (b) 0.3 m/day, and (c) 1.0 m/day (reprinted from Herrling et al., 1991).

Most GCW configurations incorporate air lift pumping to facilitate groundwater circulation, and air stripping to remove contaminant from the groundwater passing through the well. These systems transfer volatile contaminants from the aqueous phase to the vapor phase. The off-gas often requires some level of treatment for contaminant vapors prior to discharge. Off-gas treatment can be achieved in situ by direct injection into the vadose zone. More often, the off-gas is treated above ground with any of a variety of processes.

Depending on the specific application, GCW systems may have several advantages over conventional pump-and-treat technologies. These advantages are site specific and their potential must be considered on a case by case basis. One advantage is that treatment of the contaminated groundwater takes place below grade and does not require that it be pumped out of the ground. Eliminating the need to pump groundwater to the surface is an attractive feature of GCWs for two main reasons. First, treating groundwater in situ may eliminate the need for discharge permitting requirements associated with conventional pump-and-treat systems. However, it is not certain that this regulatory status won't change in the near future. Second, by achieving treatment below ground, the need to lift groundwater can be reduced and some energy cost savings may be realized, especially at sites with deep water tables.

Another advantage of GCW systems over conventional pumping and treating is that they induce a groundwater circulation zone that "sweeps" the aquifer. Pump-and-treat systems cause drawdown around the well, leaving contaminated zones that are not treated. In addition, pump-and-treat systems inherently draw water along preferential pathways in the subsurface, leaving contamination in lower permeability units. Because of this, pump-and-treat systems often become diffusion limited. GCW systems do not cause drawdown and they promote a circulation with both horizontal and vertical flow components that may cause more flux across lower permeable units.

Another potential benefit that can be realized with a number of GCW designs is the simultaneous remediation of contamination above and below the water table. This is achieved by coupling the saturated zone treatment with soil vapor extraction (SVE) or bioventing. Coupling to SVE results in the contaminants being entrained in the vapor flow to the GCW, where they are removed along with the GCW system off-gas for aboveground treatment. This coupling results in benefits similar to those realized in coupled pump-and-treat/SVE Systems. Incorporating bioventing into the design can provide for in situ destruction through biodegradation of both residual soil and GCW off-gas contamination.

These general features can make GCWs an attractive option for remediation of contaminated groundwater. However, and this cannot be overstated, the applicability of the GCW technology is quite site specific and engineering decisions must be made based on site-specific criteria before selecting a GCW system for remediation at any site.

2.2 GCW PROCESSES AND CONFIGURATIONS

There are a number of different configurations of GCWs available for a variety of applications; however, the basic operating mechanisms of all configurations are similar. All GCWs function by moving water through a well or borehole placed in a contaminated zone within an aquifer. Contaminated water enters the GCW through the influent section, the water is treated and/or amended within the GCW, then reinjected into the aquifer through the effluent section of the well. All GCWs circulate the water in situ without pumping it above ground. The specifics of the well design, method of pumping, and method of treatment vary by configuration and are selected based upon site- and application-specific requirements. The following pages outline the basic principles of GCW operation under various configurations.

MOVING GROUNDWATER

Air Lift Pumping - The most common methods GCWs use to move groundwater is air lift pumping. Air lift GCWs have an air line that extend to some depth below the water level in the well system. As air is injected, it mixes with the water and causes a decrease in the specific gravity of the fluid (Powers, 1992). The difference between the weight of the air-water fluid within the well and the water in the formation outside the well causes the water in the well to rise. As the water rises, the displaced water in the bottom of the well is replaced by water drawn in from the formation. Depending on the specific GCW configuration, the pumped water is reintroduced into the aquifer either directly through the upper well screen or through a subsurface infiltration gallery.

Mechanical Pumping - Another method used to facilitate groundwater movement is mechanical pumping. Installing mechanical pumps into GCW units allows the systems to be operated in

either an upflow of downflow mode. Mechanical pumps are incorporated into dual-screen well designs that include a packer to separate the two screened sections.

TREATING GROUNDWATER

Air Stripping - Air stripping is the most commonly applied process for achieving in-well groundwater treatment in GCWs. This process serves both to remove volatile organic compounds from the water, and to aerate the water prior to discharge from the well system. In GCW systems, the air stripping process is often facilitated by the air injected to drive the air lift pumping, which in turn drives the groundwater circulation. Air stripping is a phase transfer process during which volatile contaminants are exchanged from the aqueous phase to the gaseous phase. The partitioning between the phases is a function of the temperature of the two phases, the total pressure in the system, and the molecular interactions occurring between the contaminant and the water (Montgomery, 1985). Henry's Law describes the partitioning of the contaminant between the water and gas phases at equilibrium. In general, compounds with a higher Henry's Law constant are more easily stripped from water than compounds with lower Henry's Law constants. Effective operation of GCW systems that utilize air lift pumping and in-well air stripping of VOCs requires a balance between the pumping and stripping efficiencies. Typically, the optimum air injection rates for air lift pumping and air stripping do not coincide.

Activated Carbon Adsorption - GCW configurations are available that utilize activated carbon adsorption as the in-well treatment process. Activated carbon is commonly used in water and wastewater treatment, usually as a polishing step, and also is used for vapor-phase treatment of off-gas from unit processes such as air strippers, soil vapor extraction, and bioslurping systems. In GCWs, granular activated carbon (GAC) canisters are placed within the well. As the contaminated groundwater is pumped through the GCW, it passes through the GAC, where the contaminants are adsorbed to the carbon. The clean water is discharged through the effluent portion of the GCW. The use of in-well GAC may require mechanical pumping and GAC's effectiveness is compound specific.

Biological Treatment - GCWs are available that incorporate a bioreactor in the GCW design, thereby achieving in-well treatment of contaminated groundwater through biodegradation. The reactor utilizes biofilm technology, and is available in either a spiral wound membrane or an activated carbon support medium configuration. Bioreactors can be fairly labor intensive to operate effectively and they are subject to fouling.

Desorption and Transport - One of the overall objectives of GCW systems is to transport the contaminants from the formation to the well for treatment. The rate at which a contaminant can be transported to the well is dependent on its solubility and on the physical and chemical characteristics of the formation(s) through which the solubilized contaminant migrates on its way to the well.

Biological Degradation - Another objective of GCW systems is to remediate contamination in the formation without transporting it to the well. The primary mechanism for achieving in-place treatment is biological degradation. Typically, water entering the GCW is anoxic. As the water is air-lift pumped and aerated, the oxygen can achieve saturation levels. The oxygenated water is circulated back into the formation where the oxygen can support aerobic biodegradation of contaminants. Unfortunately, it requires pumping a large volume of water to provide the oxygen required to support biodegradation of a significant mass of contaminant.

In situ Oxidation - One available GCW configuration combines ozone and air injection with a downflow system. The ozone and entrained air are forced into the formation where the ozone can attack the contaminant. The system includes an air sparging point below the well casing that aerates the water below the well and transports contaminants up into the ozonated region of the formation for treatment. Obviously, ozone-based treatment systems are more expensive than air-based systems.

TREATING SYSTEM OFF-GAS

GCW systems that use air stripping to remove contaminants from groundwater produce vapor (off-gas) containing the transferred contaminants. The selection of vapor treatment is dependent on both contaminant type and contaminant concentration.

In situ Biodegradation - In situ biodegradation of the GCW vapor emissions through direct injection of the off-gas into the vadose zone can be a cost-effective and environmentally sound treatment option provided that the compounds in the vapor are biodegradable under aerobic conditions. Chlorinated compounds such as PCE that only degrade under anaerobic conditions will not be treated through direct injection of oxygen containing air nor will compounds such as TCE that can only be degraded cometabolically This coupling can serve to remediate residual vadose zone contamination as well as the contaminant in the introduced vapor. Direct injection of off-gas can offer the advantages of low surface emissions and no point-source generation of atmospheric contaminants, however, the vadose zone needs to be of sufficient volume and makeup to serve as such a "biofilter"

Adsorption - Adsorption refers to the process by which molecules collect on and adhere to the surface of an adsorbent solid. Adsorption is due to chemical and/or physical forces. Surface area of the solid is the critical parameter in the adsorption process, because the adsorption capacity is proportional to the surface area. Commercially available adsorbents include activated carbon and synthetic resins. GAC is a cost-effective organic vapor treatment method for a wide range of applications due to its relative ease of implementation and operation, its established performance history in commercial applications, and its applicability to a wide range of contaminants at a wide range of flowrates.

Biofiltration - Vapor-phase bioreactors are an effective method for treating a variety of gas-phase organic contaminants and have been successfully employed to treat off-gas from remediation processes, including soil vapor extraction, bioslurping, and GCW systems (Connolly et al., 1995). Because GCW system off-gas contains high percentages of oxygen, vapor-phase bioreactors are more suited for contaminants that are readily biodegraded under aerobic conditions. Bioreactors can be fairly labor intensive to operate effectively and they are subject to fouling.

Thermal Oxidation - Thermal oxidation units use high temperatures to drive the oxidation of organic contaminants in an off-gas stream. Three commercially available thermal oxidation designs include open flame, flameless, and internal combustion engine systems. These systems are appropriate for hydrocarbon contaminants and should not be considered for use when chlorinated compounds are present. Chlorinated compounds are generally not treated by thermal oxidation because they can form hydrochloric acid and potentially dioxins, according to U.S. EPA. Thermal oxidizers convert hydrocarbon compounds to carbon dioxide and water by direct oxidation.

Catalytic Oxidation - Catalytic oxidation is a thermal treatment process that uses a catalyst to lower the activation energy required to oxidize a contaminant thereby allowing acceptable destruction efficiency at a lower temperature than thermal oxidation. In catalytic oxidation, the off-gas is heated and passed through a combustion unit where the gas stream contacts the catalyst. Without undergoing a chemical change itself, the catalyst increases the oxidation reaction rate by adsorbing the contaminant molecules on the catalyst surface. In general, chlorinated, sulfur and nitrogen compounds will deactivate a catalyst, however some specialty catalysts can treat these contaminant groups.

2.3 APPLICABILITY OF GCW

As with other groundwater remediation technologies, GCW is not applicable at all sites. Moreover, its applicability range will generally be narrower than most other technologies due to an intrinsic sensitivity to hydrogeologic impediments to the development of an effective recirculation cell. Certainly there are many factors that effect the feasibility of all remedial technologies, but the factor of the nature and distribution of aquifer materials in the target zone may be of greatest importance regarding difficulties in GCW operation.

Important factors and constraints that should be considered when evaluating GCW for particular site are discussed below. Several of the more severe limitations are discussed further in Section 4.

Nature of Contaminant

Important factors affecting the feasibility and selection of GCW processes include the type contaminant being remediated, its chemical characteristics, physical distribution in the environment, and ability to be treated chemically or biologically. Specifically, the mass transfer and destruction mechanisms of the specific GCW configuration must be capable of moving the contaminant to the well for treatment or removal and/or of supporting biodegradation of the contaminant in situ. It should be noted that for less mobile contaminants, in situ biodegradation could account for the majority of treatment within the zone of influence of GCWs. The majority of removal for more mobile contaminants is accomplished by moving the contaminant from various reservoirs in the zone of influence to the treatment unit within the well. If the target contaminants are relatively immobile in groundwater GCW will likely be relatively ineffective, as compared to other technologies, even considering DO and nutrient delivery in promotion of biodegradation. Contaminant characteristics will impact the effectiveness of both the transport of the contaminant to the GCW, and the removal efficiency of the treatment unit inside the GCW. *Therefore, just on the basis of mobility in groundwater some target contaminants will* preclude the effective use of GCW.

Remediation systems are often designed to remove a class of chemical compounds. For example, a particular GCW design may be targeted to remove heavy molecular weight petroleum hydrocarbons, and would therefore be a candidate technology for the removal of diesel fuel, heavy jet fuel (JP-5), and heavier utility fuels like bunker fuel. The GCW design that is appropriate for removing heavy hydrocarbons may not be appropriate for removing a contaminant that belongs to another class of compounds. It is therefore important to review contaminants' physical/chemical properties prior to selecting and designing a GCW system

To design a remediation system for contaminant removal, it is essential to consider the physical and chemical properties, and the biodegradability of the contaminant(s). For example, a

contaminant that is not easily volatilized from the aqueous phase should not be considered for removal with a technology that includes air stripping as a primary treatment process. If the contaminant is soluble and can be transported to the well, in-well carbon absorption or biodegradation may be more appropriate.

The solubility, octanol-water partition coefficient (K_{OW}), Henry's Law constant, and/or the biodegradability of the contaminant significantly influence the treatment process selection for contaminant removal. More volatile compounds, such as benzene, toluene, ethylbenzene and xylenes (BTEX), can be easily air stripped from the circulated groundwater. Compounds such as polycyclic aromatic hydrocarbons (PAHs) and phenolic compounds, are less volatile and air stripping would not be the best process for removal of these classes of contaminants. A contaminant with a relatively high K_{OW} value will have difficulty being mobilized in groundwater and transported to the GCW. This is especially true in aquifers with higher organic content, and, for these contaminants the majority of treatment may consist of in situ biodegradation. Whether the compound can be biodegraded aerobically or anaerobically will determine whether air-saturated water or organic nutrients should be added to the circulation water, respectively. BTEX compounds, for example, are easily aerobically biodegraded while PCE can only be anaerobically biodegraded. TCE can be aerobically biodegraded, but only cometabolically, which requires the addition of a cosubstrate such as methane, phenol, or toluene. The metabolic pathways to be exploited for contaminant biodegradation must be well understood before selecting and/or designing a GCW system.

Contaminants released into the environment may be present in any or all of four phases in the geologic media as follows (Battelle, 1995):

- sorbed to the soils in the vadose or saturated zones
- in the vapor phase in the vadose zone
- in free-phase form either floating on the water table as LNAPL, as residual saturation in the vadose zone, or submerged within or at the bottom of the aquifer as DNAPL
- in the aqueous phase dissolved in pore water in the vadose zone or dissolved in the groundwater.

Depending on the specific GCW configuration, dissolved and sorbed contaminants in both the saturated and vadose zones can be targeted for remediation. Free-phase LNAPLs (including fuel hydrocarbons) whose densities are less than water generally float at the top of the water table. They act as sources for groundwater contamination and are best removed before using GCWs to prevent the risk of spreading the contaminants throughout the GCW recirculation cell. Smearing free-phase LNAPLs would result in a more difficult problem to remediate. DNAPLs (including most chlorinated solvents) have densities greater than water and do not float at the top of the water table and are consequently much more difficult to remove than LNAPLs. Because of its ability to cause vertical flow in some aquifers with suitable vertical hydraulic conductivity, GCW may be effective in mobilizing otherwise recalcitrant sorbed or free phase LNAPL and DNAPL within targeted aquifer zones.

In the saturated zone, contaminants generally either partition (i.e., adsorb) to the solid phase or remain in the aqueous phase. Their solubilities determine their maximum concentrations in the aqueous phase, while their actual concentrations over time depend on the extent of adsorption onto the aquifer material. The adsorption potential is a function of the chemical characteristics of the contaminant and the physical properties of the aquifer materials.

Because of their nonpolar (i.e., hydrophobic) nature, sorption of fuel or chlorinated hydrocarbons usually occurs via hydrophobic bonding to organic matter (Battelle, 1995). In general, the degree of sorption is empirically related to the organic content of the soil and K_{OW}, which is a measure of the hydrophobic characteristics of the contaminant. The K_{OW} is the ratio of equilibrium concentrations of a contaminant in octanol and water. Higher soil organic content and/or higher K_{OW} values result in increased adsorption that retards the mobility of the contaminants in the groundwater. GCWs designed to mobilize the contaminants from the aquifer to the GCW require the contaminants to be in the dissolved phase, and adsorbed contaminants will have to desorb into the groundwater before they can be transported to the GCW.

Solubilities of some common environmental contaminants and their K_{OW} values are shown in Table 1, along with their Henry's Law constants. Contaminants such as *n*-hexane and naphthalene are expected to be relatively immobile in the environment due to their relatively low solubilities and high K_{OW} values. Thus, GCWs should not be expected to mobilize those contaminants via groundwater recirculation. In contrast, compounds such as benzene, TCE, and TCA have higher aqueous solubilities and lower K_{OW} values, and they should be more readily transported to the GCW.

Table 1. Solubilities, Henry's Law Constant (H), and K_{ow} Values for Some Common Organic Contaminants @ 25°. (from Montgomery and Welkom, 1990)

Compound	Solubility (g/L)	H (atm m^3/mol)	Log K_{ow} (unitless)
Trichloroethylene	1.10	9.10E-03	2.3 - 3.3
Tetrachloroethylene	0.15	2.59E-02	2.1 - 2.6
1,1,1-Trichloroethane	0.30	1.8E-02	2.2 - 2.5
1,1,2-Trichloroethane	4.50	9.1E-4	2.2
Benzene	1.77	5.40E-03	1.6 - 2.1
Toluene	0.52	6.74E-03	2.2 - 2.8
Ethylbenzene	0.16	8.68E-03	3.1 - 3.2
Xylenes	.16-.20	7.04E-03	2.8 - 3.2
n-Hexane	.011	1.18	3.9 - 4.1
Naphthalene	0.03	4.84E-4	3.2 - 4.7

Site Hydrogeology

The hydrogeology of the candidate site is a very important factor that governs the implementation of the GCW technology. The occurrence and movement of groundwater is a function of the characteristics of the geologic materials comprising the aquifer. These characteristics often vary over short distances both vertically and horizontally. The geologic variables that have the most influence on the hydraulic properties of an aquifer include the rock or sediment type, facies changes, stratigraphy, type and degree of mineralization, structural features, and weathering. The geology of the vadose zone is important for GCW applications coupled to SVE, vadose zone treatment of off-gas, or infiltration galleries for recharge of treated water. The main variables affecting these configurations include soil-gas permeability, biodegradation capacity, soil moisture, and saturated hydraulic conductivity.

The physical characteristics of an aquifer and its ability to transmit water control the ability of a GCW to collect and disburse groundwater. Well yield and efficiency can be enhanced through proper design and construction. Ultimately, however, the effectiveness of GCW and well production is dependent on physical properties of the aquifer. Hydrogeologic models, which can be used to design and locate groundwater wells, assume an aquifer of locally uniform properties which, in nature, never occurs.

Stratigraphic layers have a distinct aspect or appearance as a result of being deposited or formed under particular conditions. Many of the individual particles or grains in sedimentary deposits have flat shapes. This may be due to mineralogy, as in the case of micaceous material, or to being derived from previously existing sedimentary rocks, such as shales. These flat shaped grains tend to be deposited in horizontal orientations, because this is more stable. As a result, the pore spaces between these grains are preferentially oriented horizontally as well, so that on the microscopic scale horizontal flow paths are much less tortuous than vertical flow paths. This results in horizontal hydraulic conductivity in such sediments being significantly higher than vertical hydraulic conductivity. When this microscopic phenomenon is combined with the macroscopic phenomenon of horizontally layered bedding, it is seen that relatively higher horizontal than vertical conductivity (i.e., anisotropy) is the most likely condition in sedimentary deposits, and truly isotropic hydraulic conductivity conditions are probably a rarity in nature.

Facies changes refer to both gradual and abrupt transitions of matrix within a sedimentary or unconsolidated formation and between formations. These transitions are related to the original depositional environment of the formation(s) and result in zones of contrasting hydraulic properties in both horizontal and vertical directions. Facies changes can occur at a relatively small scale, within the length of a well screen, and within the radius of influence (ROI) of a well. A horizontal, fine grained layer situated between the intake and discharge screens of a GCW will impede the development of a recirculation zone due to its relatively lower hydraulic conductivity with respect to vertical flow.

The hydraulic conductivity of an aquifer is a measure of its ability to accommodate water flow and is expressed as the rate at which water can move through a permeable medium in response to pressure head differences. Conceptually, the hydraulic conductivity of an aquifer is the volumetric flowrate which the aquifer will permit through a unit surface area and motivated by a unit hydraulic gradient. Hydraulic conductivity is generally the most important *aquifer parameter governing fluid flow in the subsurface. The velocity of groundwater* movement and dissolved contaminant migration are directly related to the hydraulic conductivity in the saturated zone. The removal efficiency of GCWs is dependent on both of these factors. In addition, subsurface variations in hydraulic conductivity directly influence contaminant fate and transport by providing preferential pathways for contaminant migration, or, conversely, creating portions at an aquifer from which it is very difficult to remove contaminants.

Because GCWs incorporate a horizontal and vertical flow component, both the horizontal and vertical hydraulic conductivities affect the system performance. While estimates of hydraulic conductivity are commonly used to determine likely flow velocities and travel times for contaminants and groundwater, estimates are generally not sufficient for designing GCW systems. Both of these parameters should be known with some precision to effectively model and design a GCW system.

The most common methods used to quantify horizontal hydraulic conductivity are single- and multiple-well pumping tests and slug tests. Both of these test methods have the common disadvantage that the resulting hydraulic conductivity values represent the "average" hydraulic conductivity over the length of the well screen in the test well(s) used to perform the tests. A test that is generally more appropriate for GCW applications is the dipole test which utilizes the intake and discharge screens, thus mimicking GCW operation. Laboratory tests on core samples can provide information on the vertical hydraulic conductivity of various layers within the target zone. Unfortunately, these analyses have three distinct disadvantages. First, cores are a very small sample and may not adequately represent the aquifer layer. A second disadvantage is that cores are disturbed and often compacted upon sample collection. Finally, it is difficult to properly scale the laboratory test to dimensions that will accurately reflect the conditions of the actual well and aquifer interactions.

Notwithstanding these limitations, every effort should be made to understand these hydrogeologic parameters to adequately assess the feasibility of GCW at a given site.

Area of Influence

The area of influence of a GCW can be defined as the horizontal distance from the well to the farthest point at which circulation flow is still significant (Herrling et al., 1991a). The area of influence is dependent on the hydrogeology of the site as well as the design of the GCW itself. Herrling reported that in an absence of natural groundwater flow, the area of influence (R) of a GCW is dependent on the:

- anisotropy (horizontal over vertical hydraulic conductivity: K_h/K_v)
- thickness of the aquifer
- length of the screen sections at the top and bottom of the aquifer.

In addition, the separation distance between the screen sections and pumping rates can affect the area of influence. Theoretically and experimentaly, a greater distance between the two screens and pumping rates will both result in a larger area of influence (Francois et al, 1996). In the presence of natural groundwater flow, the sphere of influence is defined by a stagnation point that occurs between the circulation well-induced flow and the background groundwater flow.

The vertical depth of influence of a GCW is dependent on the construction of the well, on the penetration of the well (partially or fully penetrating relative to the aquifer thickness), on the natural groundwater flow velocities, and on the anisotropy of the aquifer materials.

The area of influence is best assessed prior to installation with the application of a three-dimensional groundwater flow model that incorporates as much site-specific information as possible. The aquifer thickness and hydraulic conductivity (both K_h and K_v), the ambient groundwater flow velocity and direction, and the well configuration, including well screen lengths, placement, and pumping rates, must all be accounted for in the modeling effort.

Previous investigations pertaining to the understanding and prediction of hydraulic heads and groundwater flow near a GCW have primarily focused on the assessment of GCWs in confined aquifer settings. However, most GCW installations have been performed in aquifers under unconfined conditions so the investigations may not be completely applicable. Herrling et al., (1991a), reported the results of a three-dimensional groundwater flow modeling effort that investigated both fully (perfectly) and partially (imperfectly) penetrating wells, both under confined conditions. Philip and Walter (1992) described a semi-analytical technique for

predicting the steady-state hydraulic head and flow fields caused by the operation of multiple vertical circulation wells in a confined aquifer with a regional gradient. Stallard et al. (1996) reported results of laboratory-scale model aquifers and two-dimensional numerical modeling of GCW systems for partially-penetrating wells under unconfined conditions. This investigation used tracer studies with a laboratory-scale tank and constructed a two-dimensional flow and transport model. The numerical models were determined to be effective in estimating the plume shapes and capture efficiencies in the investigated two-dimensional case.

The area of influence of a GCW plays a crucial role in the determination of well placement and the design of a treatment system or network of GCWs. Groundwater modeling should be performed to estimate the area of influence prior to installation of a GCW. Following installation, determination of the actual area of influence can be made in the field through the use of monitoring wells/piezometers, water-level measurements, down hole or in situ flow meters, and tracer tests. It is recommended that a GCW network be initiated with one well that can be monitored to validate the model and verify the area of influence. Once the model calculations are validated, installation of the remaining wells in the network can proceed. Validating the design specifications with a single well will ensure that the network design and well spacing are adequate to meet the remediation objectives. However, as will be covered subsequently, such validation efforts are not straightforward and rarely lead to well substantiated conclusions.

Treatment Limitations

As with any technology, GCW systems have treatment limitations that restrict their use for groundwater remediation. GCWs are designed to circulate water within an aquifer. The circulated water is expected to transport the contaminants from the aquifer to the GCW for treatment in the GCW unit, and/or to transport dissolved oxygen (DO) or nutrients to the aquifer to promote in situ contaminant degradation. The ability to transport the contaminants to the GCW, or to transport DO or nutrients to the area of contamination depends on the following factors:

- the amount of water that is circulated (i.e., pumped) by the GCW
- the subsurface hydrogeology
- the nature and extent of contamination
- the physical/chemical characteristics of the contaminant.

The transport of contaminants from the aquifer to the GCW, and the transport of nutrients into the aquifer, will depend on the amount of and rate at which water can be circulated by the GCW, and on the physical characteristics of the aquifer (i.e., permeability, hydraulic conductivity, and heterogeneity). The GCW pumping rate will determine the groundwater recirculation rate, and thereby the rate of mass transfer to and from the GCW. The hydrogeologic characteristics will determine the ROI of the GCW and the groundwater recirculation flow characteristics, or flow lines. It is important to recognize the treatment limitations that physical and hydrogeological conditions can impose on GCWs, including the following:

- hydraulic conductivity determined in both the horizontal (K_h) and vertical (K_v) directions
    - impermeable soils will result in slow, restricted groundwater recirculation, while highly permeable soils may result in short circuiting

- anisotropic soils where $K_h > K_v$ are desirable to promote horizontal groundwater flow
- impermeable layers (aquitards) between the upper and lower well screens will hinder or prevent the flow of groundwater between the upper and lower wells

the depth to water table (i.e., the vadose zone depth)determines whether the vadose zone can be used for GCW off-gas remediation; off-gas remediation in the vadose zone requires a sufficient residence time; deeper vadose zones will result in longer residence times of the GCW off-gas for biological degradation of off-gas contaminants, other important vadose zone factors are: moisture content, organic content, indigenous bacteria and nutrient levels.

- the submergence (the ratio of the well depth below the water table to the total depth below the ground surface)must be high enough to ensure a cost effective groundwater circulation zone. For example, a 20 foot deep GCW where the groundwater table is at 10 feet below grade would likely not generate a circulation zone that would be cost effective for implementation in most circumstances.

- GCW groundwater recirculation flow rates must overcome regional groundwater flows, otherwise they cannot generate an effective circulation zone. The hydraulic head (pressure) established at the GCW discharge needs to exceed that of the static conditions in the aquifer at that point so that the water flowing out of the GCW can be induced to flow in upgradient and cross gradient directions. By the same effect, GCWs at sites with very steep groundwater gradients and/or high flow velocities may have very limited reach (ROI) in the upgradient direction unless adequately engineered for.

Most of these parameters; the horizontal and vertical hydraulic conductivities, the submergence, and the GCW pump rate will influence the transmissive capacity of the aquifer, and the quantity of water that can be moved and recirculated through the aquifer using a GCW. Therefore it is important that they be determined on a site-by-site, case-by-case basis using data from site specific tests, not estimated values. Pump testing, permeability testing of all differing aquifer material units and detailed analysis of continuous core samples are characterization steps that will aid in the evaluation of the potential effectiveness of GCW.

Geochemistry will affect the long-term operation and success of GCWs, depending on the physical, chemical, or biological processes being employed. The water entering a GCW usually will contain very little oxygen. However, air lift pumping and/or air stripping will result in the introduction of DO in the water. Iron and manganese in the groundwater may react with oxygen to form iron or manganese oxides. Thus, the iron and manganese may exert an oxygen demand, rendering less oxygen available for microbial growth. In addition, these oxides could precipitate and clog the well screens, the surrounding soils, or the treatment processes within a GCW. In anaerobic systems, these metals generally are more stable in their soluble forms and do not risk precipitating. If the GCW is designed to promote biological degradation of the contaminants, it should be ensured that the pH is close to neutral and that there is sufficient buffering capacity (carbonate alkalinity) to maintain neutral pH, which generally facilitates more effective biodegradation of the contaminants.

GCW treatment processes include in-well air stripping, in-well activated carbon treatment, or in situ and in-well biological treatment. Each treatment process has certain advantages and limitations. In-well air stripping has the advantage of being employable with a

variety of well sizes. Thus, relatively small, inexpensive GCWs can be used. However, in-well air stripping effectiveness is limited by the volatility of the contaminants and the air/water contact within the GCW. The dynamics and size of air bubbles are key to the effectiveness of GCW, they are manipulated by the configuration and size of air inflow terminus as well as air pressure. Air stripping is most efficient when fine bubbles are used, while air lift pumping is most efficient when larger diameter bubbles are used. The use of larger air bubbles to meet the need of the air lift pump reduces the air stripping capacity, and a larger well size may be required to meet the air stripping requirements. In addition, the contaminated air stream must be treated with GAC or alternative methods, or be injected into the vadose zone where the contaminants can be biologically degraded before being released into the atmosphere. GAC treatment of the off-gas usually is conducted aboveground and adds to the capital and operating costs of the GCW process. In situ treatment in the vadose zone requires (1) that the contaminant be aerobically biodegradable and (2) that there is sufficient depth in the vadose zone to provide the required residence time and (3) that appropriate microbes are present in the vadose zone.

In-well GAC treatment generally requires large GCW well diameters (i.e. greater than 8 inches) to meet the GAC requirements of the contaminated groundwater. The GAC must be able to be easily removed and replaced. GAC disposal and replacement will add to the long-term operating costs of a GCW. Aboveground GAC treatment is possible and permits the use of a smaller GCW diameter. However, aboveground treatment implies that the extracted groundwater will breach the ground surface, and will be reinjected after treatment, which may result in more stringent regulatory requirements than in-well treatment options. There are a wide variety of GACs available and standard tests, such as a liquid phase adsorption isotherm test, have been developed to determine adsorption capacities for the targeted species mix. In addition to selecting the correct GAC, system designers need to consider velocity, contact time and contaminant loading factors.

Air lift Capacity vs. In-Well Air Stripping

In GCW designs that use airlift to pump water and air stripping as the primary treatment technology, it is necessary to optimize the interaction of these two mechanisms to achieve the system's objectives. The optimum air injection rate for airlift pumping is unlikely to be the optimum rate for air stripping. Air stripping efficiency is maximized with air and water interactions requiring high specific surface areas (surface area per unit volume) as described by the dual film theory (Bird et al., 1960). Airlift pumping efficiency is affected more by the submergence depth of the air injection point. While the efficiencies of both processes are dependent on the air-to-water flow rate ratio (Q_a/Q_w), different mechanisms occurring at the air-water interface impact each process. Inertial interactions between the two fluids drive airlift pumping, whereas diffusive mass transfer interactions control air stripping. It must be noted that diffusive mass transfer occurs at different rates with different contaminants, while airlift pumping only weakly depends on contaminant type.

It is the responsibility of the GCW system designers to ensure that the system is constructed so as to make efficient use of energy for both air stripping and airlift pumping in coupled systems. An engineering decision may be made to divide pumping and treatment processes if the respective process optima require widely different designs or air injection rates. For example, at very deep sites the air injection rate required for pumping may be many times greater than the rate required for efficient stripping. In such a case, it may be beneficial to use a mechanical pump to lift the water to a smaller, in-well air stripping system. Vendor-supplied systems currently exist for such applications (see Section 3).

Short-Circuiting of Groundwater Flow

The potential for the short-circuiting of groundwater flow, or direct flow from the portion of the GCW with relatively higher hydraulic head to the portion of the GCW with relatively lower hydraulic head without flowing radially away from the well, is a potential physical constraint of GCW design. Short-circuiting can occur within an improperly grouted or packed borehole or in the immediate vicinity of the well.

Well construction and adequate grouting in the borehole are essential to the physical and hydraulic separation of the injection and withdrawal portions of the well. A continuous sand pack in the borehole would provide no physical or hydraulic separation between these two areas, allowing water to be transmitted within the borehole without traveling through the aquifer matrix. Short-circuiting may also occur due to isotropic conditions in the aquifer, in which the vertical permeability of the aquifer materials is the same as the horizontal permeability. In this situation, the driving force for horizontal flow away from the GCW is limited and flow is likely to proceed directly from the injection screen to the withdrawal screen. Section 4.1 of this report discusses this phenomenon more thoroughly.

3.0 VENDORS AND CASE HISTORIES

GCWs are a vendor based technology involving a number of patents. It can be speculated that because of the motivation of the vendors to market the technology, data regarding failures or lessons learned are, in general, not forthcoming. Also GCW has not benefited from a broad DoD-funded initiative and therefore, well documented demonstrations are few. This benign neglect from the federal funding standpoint is certainly not unjustified based on the paucity of well documented successes.

Recognizing the potential value in collecting case histories to aid in evaluating the efficacy of GCW, DoD's Environmental Security Technology Certification Program (ESTCP) funded a state of the art evaluation of GCW technology.. Six DoD funded demonstration projects were evaluated by Battelle Memorial Institute (Battelle, 1998) and 45 case history data sheets were provided by the four vendors.

In this section, the GCW products offered by the vendors are summarized, data from the vendor case histories are discussed and eight DoD case histories are presented.

3.1 VENDORS

Wasatch Environmental, Incorporated

Wasatch Environmental, Incorporated of Salt Lake City, Utah, offer the Density Driven Convection (DDC) GCW system. This system consists of a 2- to 6-inch diameter well casing with 2 screened intervals. The well installation is similar to a conventional monitoring well except that the 2 screened sections are separated by an annular seal. Air is injected at the base of the well creating air bubbles that ascend towards the upper screened section. As the air bubbles rise, contaminants are stripped from the groundwater and the dissolved oxygen content of the water inside the well increases to about 10 mg/L (Schrauf et al., 1996). Also, the rising air bubbles act as an air lift pump creating a pressure gradient inside the well that pumps groundwater up the well casing to the upper screen section. The groundwater then enters a circulation flow around the well, drawing groundwater into the lower screened section and expelling groundwater and air from the upper screened section. Figure 2, given at the end of this section, shows a schemetic of a typical DDC well.

The remediation elements of the DDC system are air stripping and biodegradation. Air stripping occurs inside the well as the bubbles pass through the contaminated groundwater. Biodegradation in the groundwater occurs due to increased dissolved oxygen content and the system's ability to circulate nutrients, such as phosphorus and nitrogen. Biodegradation also can occur in the unsaturated zone as the stripped contaminants leave the upper screened section and enter the vadose zone. The biodegradation in the vadose zone is similar in concept to bioventing.

The DDC system utilizes simple, small diameter wells that can be a significant cost savings during installation. Using the vadose zone as an in situ bioreactor can also decrease or even eliminate off-gas treatment costs. Currently, Wasatch Environmental has applied the DDC at 6 pilot-scale sites and 28 full-scale sites, and site closure has been achieved at 9 sites.

MACTEC

MACTEC is the distributor for the NoVOCs GCW system offering several designs for various applications. This GCW system is designed to preferentially extract VOCs dissolved in groundwater by converting them to a vapor phase and treating the vapor. The NoVOCs system involves the combination of airlift pumping to move the water and in-well air stripping to remove volatile compounds and aerate the water prior to reinjection. NoVOCs systems have been installed at over 16 sites, of which five were submitted as case histories to this evaluation. A standard NoVOCs well is shown schematically in Figure 3 at the end of this section.

A NoVOCs configuration for remediating contamination in confined aquifers where cleaned water must be recharged into the same zone uses a NoVOCs well which is constructed using an eductor pipe for the aeration column and the screened interval for reinjection if positioned below the confining layer. Air is injected through a supply line into the eductor to effect air lift, air stripping, and aeration of the water as it passes through the system. The water is lifted to a height above the reinfiltration screen, causing ponding of the water in the upper zone. This results in a buildup of enough pressure head to force the water back into the formation. Such a configured NoVOCs well is shown in Figure 4.

A reverse flow NoVOCs configuration is utilized at sites that require a reverse circulation flow, such as those with floating product. As with the other NoVOCs configurations, the air lift, air stripping, and water aeration occurs in an eductor pipe assembly. The lifted water is transported from the top of the well to a packed off reinjection section at the bottom of the well through a recharge drainage line. The pressure head buildup above the eductor pipe from ponding water forces the water into the formation below the extraction screen.

Other variations on the basic design include using infiltration trenches in place of an outer casing as an infiltration zone. This configuration addresses issues at sites with low infiltration rates in the vadose zone and also sites with shallow groundwater and very thin vadose zones. An additional design variation is to use the vapor stripping well (re-circulation well) to distribute bio-amendments to the subsurface. This "Abio-enhanced" (Trade Name)version of the vapor stripping system could potentially speed the overall treatment time and possibly lower the final contaminant concentrations in the aquifer.

IEG Technologies Corporation

IEG Technologies offers several configurations of GCWs of their Vacuum Vaporizer Well (UVB) and Coaxial Groundwater circulation (KGB) systems. UVB and/or KGB systems have been installed at over 50 sites in the U.S. and Europe for treating groundwater contaminated with a variety of contaminants including petroleum hydrocarbons, chlorinated solvents, and pesticides.

IEG Technologies describes the KGB system as a combined "push and pull" technology that combines in situ air stripping with soil air venting. These systems are of an air lift design and are designed to transfer volatile contaminants to the vapor phase for extraction and aboveground treatment using activated carbon adsorption. The system consists of an air distributor that is placed at the bottom of a borehole, a double cased screen to facilitate bubble/water separation, and sampling tubes to sample the upper and lower portions of the system. Typical KGBs are placed into boreholes filled with artificial packing such as gravel and do not include a well screen.

Air is injected via an aboveground air compressor through the distributor. The injected air drives the air lift pumping action and serves as the stripping mechanism to remove volatile contaminants. A vacuum is maintained on the system headspace to enhance the stripping efficiency during air lift, and to facilitate removal of vapors transported to the KGB from the surrounding vadose zone and from the air stripping off-gas. Typically, activated carbon canisters are placed in series behind the vacuum system.

UVB systems are available in several configurations including the UVB-Standard Circulation as shown in Figure 5, UVB-Reverse Circulation, UVB-Microbiological Remediation as shown in Figure 6, and UVBs are similar to KGBs in that they also utilize a vacuum system to facilitate contaminant removal and/or oxygenation of circulated groundwater, while simultaneously supporting soil venting. The systems differ in that they are installed in dual screened well casings and can be operated in either an upflow or downflow mode.

UVB-Standard circulation systems are airlift systems and operate in an upflow mode. The vacuum on the well head serves to lift the groundwater and to draw ambient air through a pipe to a stripping reactor placed below the working water-table elevation. A water-conducting pipe extends from the bottom of the stripping reactor through a packer that separates the upper well screen from the lower well screen. The stripped contaminants and volatile contaminants that are transported to the well from the surrounding vadose zone are removed from the well head and treated aboveground, usually by activated carbon adsorption.

The UVB-Reverse Circulation system differs from the UVB-Standard Circulation system in that it operates in a downflow mode and is not an air lift system. The UVB-Carbon Adsorption system has an activated carbon canister incorporated into the well design. Contaminated water entering the well is passed through the activated carbon unit where adsorption takes place and clean water is aerated and returned to the aquifer. The UVB-Microbiological Remediation system incorporates a mechanical pump and a biofilter type reactor into the design of a standard UVB system.

KV Associates

KV Associates offer the C-Sparger System that combines groundwater circulation with air sparging. This system is specifically designed to remove dissolved degreasing solvents such as PCE, TCE, and DCE from groundwater. The C-Sparger System utilizes a 2- to 4-inch PVC well casing with two screened sections separated by an expandable packer. A submersible pump is used to draw groundwater into the upper screen and push it out the lower screen, creating a circulation pattern around the well. Air sparging is accomplished using a Spargepoint installed beneath the well casing as shown schematically in Figure 7. Micro-fine bubbles are created by the Spargepoint to strip volatile contaminants from the groundwater as they travel through the saturated soil matrix. The system alternates between groundwater circulation and air sparging to increase agitation in the formation, thus increasing stripping efficiency. One C-Sparger System can operate up to 3 well assemblies.

KV Associates describe other advantages of the C-Sparger System in their literature. The advantage of using a Spargepoint to inject air into the system, as opposed to a standard well screen, is the production of the micro-fine bubbles. These fine air bubbles are small enough to penetrate sandy formations, allowing much easier fluid flow than larger bubbles (Kerfoot et al., 1996). Ozone is injected with the air into the Spargepoint. Ozone is a powerful oxidant of

organic compounds, however its life span is short if injected alone. The fine air bubbles encapsulate the ozone and increase its life span in the aquifer. It is theorized that the dissolved contaminant is stripped from the groundwater by the air bubbles, and the encapsulated ozone oxidizes it. KV Associates claim that a C-Sparger System can attain a radius of influence of 30 to 50 feet, depending on geologic conditions. It is unknown how many C-Sparger systems have been successfully installed and operated at sites to date, there was only one case history available to this study.

3.2 VENDOR CASE HISTORIES

45 case histories were submitted to ESTCP in late 1996 in the form of one page data questionnaires. The validity and accuracy of these data have not been checked by any outside parties and therefore should be considered as not validated.

Table 2 lists the contaminants or contaminant groups that were targeted across the 45 sites and the number of sites targeting the contaminants. Concentration reductions were claimed for all of the listed contaminants.

Table 2. Case Histories Grouped by Contaminant Class

Contaminant	
Petroleum Hydrocarbons	**No. of Sites**
TPH	3
BTEX	2
Benzene	21
Toluene	13
Ethylbenzene	16
Xylenes	15
Non-Petroleum Hydrocarbons	
Methanol	1
Isopropyl Ether	2
Polycyclic Aromatic Hydrocarbons	
Naphthalene	12
2-ring PAH	1
3-ring PAH	1
Chlorinated Hydrocarbons	
Multiple Chlorinated Hydrocarbons	12
Dichloroethene	2
1,1-dichloroethane	1
1,2-dichloroethane	1
1,1,1-trichloroethane	1
Perchloroethylene	3
Trichloroethylene	3

Table 3 provides the GCW system type, estimated anisotropy, number of GCW wells, target aquifer thickness, ROI, duration of operation, closure status and location reported for each of the 45 sites. It is noted that the vendor supplied anisotropy values seem unreasonably low since tracer values, which are much higher, are reported in the scientific literature (Freeze and Cherry, 1979). Table 4 gives the range and average values for these parameters while Table 5 summarizes the location and closure data.

Distilling this data by vendor results in the following breakdown:

- 20 DDC sites (16 in Utah) totaling 241 wells
- 19 UVB sites (12 in Germany) totaling 28 wells
- 5 NoVOCs site totaling 6 wells
- 1 KVA site totaling 3 wells

The closure percentage reported of 58% based on 26 of 45 sites would seem an impressive testament of the effectiveness of GCW, however, if only U.S. sites are considered, the percentages falls off to 39% and if the Utah sites are disregarded, the percentage of reported closures drops to 33%.

Again, these data, especially the important parameters of ROI, duration of operation and achievement of closure, do not necessarily represent those typical of GCW because the vendor provided data has not been validated.

Table 3. GCW Vendor Provided Case History Data.

Case #	Type	Estimated Anisotropy Kh/Kv	# of Wells	Target Aquifer Thickness (ft.)	R.O.I. (ft.)	Duration (months)	Closure	Location
1	DDC	18 ft/day *	10	12	18	19	yes	UT
2	DDC	---	1	8	10	14	yes	UT
3	DDC	---	1	15	15	12	yes	UT
4	DDC	---	6	10	15	60 +	no	UT
5	DDC	---	18	15	25	60 +	no	UT
6	DDC	---	19	10	12	28	yes	UT
7	DDC	---	10	12	20	60 +	no	UT
8	DDC	---	5	9	20	60 +	no	UT
9	DDC	16gpd/ft^2 *	5	15	23	25	yes	UT
10	DDC	---	41	12	15	48 +	no	UT
11	DDC	---	18	15	15	48 +	no	UT
12	DDC	---	11	15	15	48 +	no	OK
13	DDC	80 ft/day	8	15	25	36 +	no	UT
14	DDC	---	5	17	15	11	yes	UT
15	DDC	---	4	20	20	10	yes	UT
16	DDC	10	32	15	15	36 +	no	MS
17	DDC	---	15	25	25	36 +	no	UT
18	DDC	13 ft/day *	4	10	15	24 +	no	WY
19	DDC	---	10	20	15	24 +	no	CC
20	DDC	4 ft/day *	18	15	25	24 +	no	UT
21	NoVOC	5	1	15	>40	4 +	no	VM
22	NoVOC	5	1	30	---	24 +	no	ID
23	NoVOC	2.2	1	6	<35	2	yes	WA
24	NoVOC	5	2	50	120	17	yes	France
25	NoVOC	10	1	23	>50	7	yes	CA
26	KVA	5	3	250	40	3	yes	MA
27	UVB	10	1	12	35	36 +	no	NC
28	UVB	10	1	107	200	24 +	no	NC
29	UVB	10	6	115	228	17	yes	Germany
30	UVB	10	2	36	72	71	yes	Germany
31	UVB	10	2	18	36	34	yes	Germany
32	UVB	10	1	41	82	36	yes	Germany
33	UVB	10	1	20	45	36 +	no	NC
34	UVB	10	1	33	65	2	yes	Germany
35	UVB	10	1	20	40	19	yes	Germany
36	UVB	10	1	49	100	4	yes	Germany
37	UVB	10	1	10	20	5	yes	Germany
38	UVB	10	1	20	40	15	yes	Germany
39	UVB	10	1	23	46	38	yes	Germany
40	UVB	10	1	15	30	18	yes	NC
41	UVB	10	1	26	53	34	yes	Germany
42	UVB	10	1	24	52	55	yes	Germany
43	UVB	10	2	36	72	28	yes	Germany
44	UVB	10	1	10	35	24 +	no	FL
45	SZB**	10	2	33	64	16	yes	Germany

* Horizontal hydraulic conductivity only. ** a specialized IEG deign

Table 4. Statistics from Table 3 Data

Values	EstimatedAn isotropy Kh/Kv	# of Wells	Target Aquifer *Thickness* (ft.)	R.O.I. (ft.)	Duration (mo.) closure	Duration (mo.) non-*closure* **
Range	2.2-10	1-41	6-250	10-228	2-71	4+ -60+
Average	8.9	6	29	45	21	37

** Ongoing remediation

Table 5. Closure Statistics from Case Histories

Location	Site Closures	Sites
UT	7	16
OK	0	1
MS	0	1
WY	0	1
CC	0	1
VM	0	1
ID	0	1
WA	1	1
CA	1	1
MA	1	1
NC	1	4
FL	0	1
France	1	1
Germany	14	14

3.3 DETAILED DoD CASE HISTORIES

DoD has sponsored or hosted several demonstrations of the GCW technology. Performance data for eight of these demonstrations was reviewed and a summary of each demonstration is provided in the following pages.

Port Hueneme Naval Exchange Site

In January 1995, the Strategic Environmental Research and Development Program (SERDP) supported a joint effort between the U.S. Naval Research Laboratory (NRL), the U.S. Environmental Protection Agency (EPA), Texas A&M University, SBP Technologies, Inc., IEG Technologies, Inc., and Beazer East, Inc. The objective of the effort was to determine the catabolic activity of indigenous soil microflora on the constituents of interest. The GCW technology was selected as the strategy to achieve the project objective. The following is a brief description of the GCW installation at Port Hueneme Naval Exchange site and the findings that were relevant to implementing the GCW technology. More detailed information can be found in Spargo, 1996.

The site was contaminated with approximately 11,000 gallons of gasoline that leaked from two delivery lines between September 1984 and March 1985. The soils within 10 m of the surface at the site consist of three units: (1) fine-grained silty sand to 1.7 m below ground surface (bgs), (2) fine- to coarse-grained sand to approximately 6.2 m bgs, and (3) sandy-to-silty clay unit encountered between 6.2 and 8 m bgs. There are five aquifers beneath the site; however, the contamination was confined to the upper perched aquifer and the research focused on this formation.

The depth to groundwater was between 1 and 3.7 m bgs which is considered to be less than optimum for most GCW designs. The hydraulic gradient at the site was 0.001 ft/ft to the southwest and groundwater flowed in this direction with a velocity of 231–548 m/yr. The horizontal hydraulic conductivity was measured at 3.84 x 10-2 cm/s and the vertical hydraulic conductivity was estimated at 3.84 x 10-3 cm/s.

The GCW system consisted of four GCW wells. One GCW-400 system was installed in a 400-mm ID. well casing (GCW-400) placed near the source. Three GCW-200 systems were installed in 200 mm ID. well casings (GCW-200) downgradient of the main spill. These wells were placed to provide plume containment. The GCW-400 unit off-gas was initially treated by an above ground thermal oxidation unit which was eventually replaced by a GAC unit when concentrations declined. Off-gas from the three GCW-200 units was treated by GAC.

The upper screen of the GCW-400 extended from 2.4 to 4.8 m bgs to facilitate discharge of the treated groundwater and to maximize the SVE/bioventing in the vadose zone. The lower screen extended between 6.64 and 8.01 m bgs. The well was equipped with a single three-phase, 208 volt, 5-hp blower and a single three-phase, 110-volt, 0.5-hp submersible pump. Four sets of three monitoring wells (12 total) were installed around the GCW-400. The wells were installed to provide shallow (3.2 to 3.7 m bgs) and deep (7 to 7.2 m bgs) samples. A vadose zone sampling port was included at 2.3 to 2.5 m bgs.

The three GCW-200 wells were installed with overlapping ROIs to form a "biocurtain" to prevent the off-site migration of contaminant. The upper and lower screens were placed between 2.2 and 5 m bgs and 7 and 8.7 m bgs, respectively. Based on a calculated stagnation point distance of 18.91m and a modeled width of the circulation cell of 38.91 m, the wells were placed 40.02 m apart. A total of eight monitoring wells were placed around the biocurtain. The eight monitoring wells were configured the same as the wells around the GCW-400 system.

An intensive monitoring schedule was followed to assess the performance of the GCW systems and monitor the biodegradation of the contamination. Weekly, duplicate groundwater samples were collected from selected well and analyzed for pH, dissolved oxygen (DO), inorganic nutrients (N,P, chemical oxygen demand (COD)), and temperature. Duplicate soil-gas samples were collected from each of the 20 monitoring wells on a regular basis and analyzed for oxygen, carbon dioxide, and methane concentrations and stable carbon isotope ratio. In addition to the more routine sampling above, eight quarterly sampling events were conducted for rigorous detailed analysis of system performance (see Spargo, 1996) including VOCs in the system off-gas, which was low due, in part, to enhanced in situ biodegredation. Outside of one instance of incomplete combustion of added propane fuel, stack monitoring of the off-gas indicated effective vapor treatment of VOCs whether GAC or thermal oxidation was used. Convergent and divergent dye tracer tests were conducted with Rhodamine WT, eosine and flourescien using insitu charcoal samplers to verify groundwater circulation.

The data showed that within 8 months of operation, BTEX concentrations in the shallow monitoring wells closest to the GCW-400 system were reduced by 52% decreasing from 4.66 mg/L to 2.88 mg/L. It was concluded that free product in the vicinity of the GCW-400 system was responsible for the low removal performance. Data from the biocurtain wells showed the BTEX concentrations in the shallow well in the center of the biocurtain were reduced by 97% over the first three months of operation decreasing from 772 mg/L to < 26 mg/L. After 6 months, BTEX concentrations in samples from these wells were below 0.002 mg/L, which was in compliance with the California groundwater drinking criteria. BTEX concentrations in groundwater from the deep wells were reduced from 118 mg/L to under 0.001 mg/L after 6 months of system operation. Based on these results, it was concluded that the biocurtain was effective in providing in situ containment. In addition, it was determined that bacterial production was stimulated across the zone of influence of the GCW.

Although the results presented in the above referenced report appear promising, too little data were presented in the report to make any conclusions about the design and operational performance of the GCW at Port Hueneme.

Hill Air Force Base

In 1996, the Air Force sponsored a 44-week technology demonstration of the Unterdruck-Verdampfer-Brunnen (Vacuum vaporizer well) (UVB) GCW technology at Operable Unit (OU) 6 at Hill AFB, Utah beginning in January and ending in November. The primary contaminant at the site was TCE. The objectives included (1) determine the ability of the UVB technology to reduce TCE concentrations in the aquifer to 5 µg/L; (2) to determine what parameters are most useful for monitoring the system; and (3) to evaluate the feasibility of going full-scale with the technology at the demonstration site. The following sections provide a summary of the test and results. More detailed information can be found in the report *Technology Performance and Application Analysis of UVB Groundwater Circulating Well Technology, Operable Unit 6, Hill AFB, Utah* (Radian, 1996) and *ATTACHMENT to the Technology Performance and Analysis of UVB Groundwater Circulating Well Technology, Operable Unit 6, Hill AFB, Utah (Radian, 1997).*

OU 6 is located in the northern part of Hill AFB in an area that was used for, or in support of, maintenance and testing operations. It is believed that operations-related solvent use began around 1960. TCE is the primary contaminant of concern at OU 6 although other contaminants have been detected at below their respective maximum contaminant levels (MCLs). It is believed that these contaminants have been introduced into the environment through leaking underground storage tanks and possibly surface spills. The resulting plume was approximately 500 x 3,000 ft with a maximum detected TCE concentration of 440 µg/L. The average peak concentration in the center of the plume was typically between 200 and 300 µg/L.

The geology at the site consists of fluvial-deltaic deposits. There are three aquifers underlying OU 6 with the contamination confined in the upper aquifer, which is between approximately 105 and 135 feet bgs. The aquifer is predominantly fine-grained sand with some variability in grain size and density distribution. A fairly continuous, 0.1- to 3.0-ft-thick clayey silt layer exists at approximately 110 feet bgs. The hydraulic gradient was 0.02 ft/ft with groundwater flow to the north at approximately 0.53 to 1.8 ft/day.

A constant-rate aquifer pump test was conducted to characterize the aquifer in the test area. Three horizons were monitored during this test. The results showed that the aquifer

response was similar among the horizons, indicating that there was communication between the three horizons. The horizontal hydraulic conductivity ranged between 2.6×10^{-3} and 9.6×10^{-3}. The storativity ranged between 0.0004 and 0.029.

The test system at OU 6 consisted on one UVB 200 system, three 2-inch-diameter annulus wells, and ten monitoring well clusters. The UVB system consisted of an 8-inch-diameter steel casing with an 8-ft upper screen section that straddled the water table, and a 4-ft screened section that was placed between 127 and 131 ft bgs. The system was designed to provide an air-to-water ratio of 50:1, a stripping efficiency of 90 to 99%, an airflow rate of 60 scfm, and a groundwater throughput of 8.8 gpm. Based on modeling by the vendor, the theoretical capture zone width of the top and bottom of the zone was expected to be 16 and 175 ft, respectively. Nine of the ten monitoring well clusters were placed within this zone of influence. Each monitoring well cluster consisted of three monitor wells containing 5-ft-long screened sections placed at three depths to cover the thickness of the aquifer. The screened sections were isolated from each other by a bentonite seal. The annulus wells installed in the borehole for the UVB system contained 5-ft screened sections placed adjacent to the UVB well screens. Two annulus wells were placed adjacent to the upper screen and one adjacent to the lower screen. These wells were used to monitor the influent and effluent from the UVB system.

The UVB system was started in January 1996 and operated for 44 weeks. During this time, TCE concentrations were measured in the aquifer and around the well. Bromide tracer tests were conducted to determine the groundwater throughput in the well. This entailed injecting a known concentration of tracer at a known flowrate into the influent section of the well and monitoring the dilution of the tracer at the effluent section of the well. A divergent tracer test was conducted using fluorescein dye to determine the ROI of the well. This entailed injecting the dye into the air intake line and monitoring for the appearance of the dye in the monitoring wells surrounding the UVB well. A converging tracer test was conducted using sulfur hexafluoride (SF_6) to determine if groundwater from a distinct point within the design ROI would be captured by the UVB well. This test entailed injecting SF_6 into one of the mid-level monitoring wells and monitoring for its appearance at the UVB well.

Based on observations made in the field, four major system configuration changes were made during the 44-week operation period. The first modification was the installation of a canister-type stripper above the upper screen. This change was made necessary by a rise in the static water level. The second modification was replacing the inflatable packer with a fixed packer. This was necessary because excessive leakage across the inflatable packer prevented groundwater circulation. Leakage was confirmed by the first throughput tracer test. The third modification was a reduction in the pumping rate from 17.6 gpm to the design flow of 8.8 gpm. This was done because the vendor believed that the pumping and discharge rates were more than the aquifer could handle. The final modification entailed raising the canister stripper an additional 2 feet to accommodate the water level, which had risen to the point that it was interfering with airflow and treatment at the well.

The results from both the TCE analysis and the tracer tests showed that the UVB system did not operate according to design. As mentioned above, the first throughput tracer test indicated that the flow through the well was much lower than the 17.6 gpm rate that the submersible pump was pumping, indicating that significant leakage across the packer was occurring. Upon replacing the packer, a second tracer test indicated that there was no net movement of water through the well. The results from the TCE analysis, pressure transducer readings within the ROI, and the other two tracer tests confirmed this observation.

Prior to changing the packer, there was an estimated 1 gpm throughput in the well. Although this was far below the 8.8 gpm design flow, pressure transducers in two shallow monitoring wells as far away as 30 feet showed some response to UVB operation, indicating that the ROI at the top of the aquifer extended at least this far from the well. Based on the system throughput and an estimated groundwater specific discharge, the maximum width of the capture zone was 21 ft, approximately 20% of the average design distance. Unfortunately, the TCE concentration in the UVB influent rapidly decreased from 45 μg/L to non-detect levels and the effluent TCE concentrations remained at non-detect levels during the test period. This indicated that there was serious short circuiting in the immediate vicinity of the well and that no significant level of treatment was occurring at any appreciable distance from the well. This was confirmed by the lack of decrease in TCE concentrations in any of the monitoring wells.

After the packer was changed, there was no response registered by the pressure transducers when the UVB was operated and there was no decrease in TCE concentrations in any of the monitoring wells over the duration of the test period. Other water quality parameters measured during the test also showed no indication that groundwater was being circulated. The data from the divergent tracer test showed a much higher concentration of tracer at the influent screen and a much lower than expected concentration at the effluent screen. This strongly suggested that short circuiting was occurring within the well. The results from the convergent tracer test showed that there was no communication with the mid-level monitoring well located approximately 25 ft cross gradient to the UVB well, but there was communication in a well located approximately 30 feet downgradient from the UVB well. This revealed that water was moving past the UVB well but not being circulated by the UVB well.

Additional aquifer tests were conducted to explain the lack of groundwater circulation. Falling-head permeameter tests revealed that the vertical hydraulic conductivity varied by more than three orders of magnitude in a core taken 30 ft from the UVB well. The data showed that the hydraulic conductivity at the UVB discharge zone was lower than the hydraulic conductivity at the UVB intake zone.

Mass balance analyses showed that the UVB system removed on average 96% of the TCE that entered the well. This was within the design stripping efficiency of 90 to 99% removal, indicating that the air stripping component of the UVB well performed as expected. The total mass of TCE removed over the 44-week period was estimated at 0.04 lbs. Based on the mass balance analysis, the TCE concentration in the off-gas should have been approximately 13 ppbv; however, TCE was only detected in one off-gas sample at a concentration of 2.2 ppbv. This indicated that the throughput in the well was even less than the estimated 1 gpm.

A cost analysis was performed for implementing and evaluating the UVB technology based on contractor estimates and actual costs from the demonstration at OU 6. The cost breakdown was as follows.

Item	Cost
Well Components	$ 61,860
Well Installation	$ 38,185
Energy (1 yr)	$ 2,439
Tracer Testing	$ 30,725
Total	$ 133,209

The above analysis gives an approximation of the costs for implementing and evaluating a UVB system similar to the one at OU 6. There are, however, additional costs, such as those associated with planning, connection to power, additional construction and site work, instrumentation, sampling and analysis, and reporting. One of the advantages that may be realized with groundwater circulating wells is a cost savings because of a smaller energy requirement without having to pump groundwater to the surface. A cost analysis of the energy costs for 1-year operation of the UVB, of a pump-and-treat system, and of in situ air sparging technologies showed the energy costs were $2,439, $686, and $6,859 for these technologies, respectively. This indicated that the energy savings would not be realized at the OU 6 site.

The primary conclusion from this technology demonstration was that the technology did not provide a barrier to TCE migration at OU 6. Although the system did appear to circulate groundwater and did reduce TCE concentrations across the well before the packer was replaced, the system operated far below the design specifications. After the packer was replaced, the system simply did not work. This fact, as well as the data from the tracer tests and subsequent aquifer tests, points out several problems with this specific installation.

First, the hydrogeologic investigation and the data set used in designing the well were insufficient. Although the data from conventional aquifer testing indicated ideal conditions for conventional groundwater pumping, data was not collected to adequately characterize the aquifer and properly design a GCW system. Effective GCW operation relies on a vertical component of groundwater flow to drive circulation in the aquifer formation. At a minimum, it is necessary to know the vertical hydraulic conductivity to effectively predict aquifer response to GCW operation. This parameter was not determined prior to design and installation of the UVB system at OU 6. Tests conducted subsequent to UVB installation showed significant horizontal stratification with highly variable vertical hydraulic conductivity. Had these data been collected prior to design, the outcome from this demonstration may have been predicted. The net result illustrates the importance for conducting aquifer tests specifically designed for GCW implementation.

The other major problem that was apparent from this demonstration is the failure of equipment. GCW systems are more complex than conventional pump-and treat systems, and the integrity of all in-well components is essential for proper operation. Although the submersible pump and in-well air stripper functioned according to design, the packers leaked, resulting in poor groundwater circulation. The results from the tracer tests indicated that the packers used in this system were either not properly designed or that they were faulty. The head loss across the packers was apparently less than the head loss in the aquifer, causing the water to short circuit within the well. The second packer failed more than the first packer, suggesting that more consideration needs to be given to the pressure ratings of the packers during the design phase. Because the system at OU 6 was a deep system, changing the packers required heavy equipment to pull the system components from the well and the process was slow and expensive. This demonstrated the importance of getting the design and installation of a GCW system right the first time so as to avoid the need for pulling well components for replacement and/or repair. The results from this demonstration show how important it is for the vendors to be held responsible for costs of correcting improper design or repairs due to predictable component failures.

Tyndall Air Force Base

The Air Force conducted a GCW demonstration at Tyndall AFB, Florida between July 1994 and July 1995. The objective of this demonstration was to determine if the GCW

technology could be coupled with bioventing to simultaneously treat contamination in both the saturated and unsaturated zones. The demonstration did not include extensive GCW design nor GCW system optimization. The targeted contaminants were hydrocarbons that resulted from leaking underground storage tanks (USTs) holding JP-4 and diesel. Details about this demonstration can be found in the Battelle (1995) report.

Two GCW designs were included in this demonstration. The first one, identified as a modified bioventing well (MBW) system, consisted of a simple air lift pump installed in a 4-inch bioventing well that was modified to extend into the groundwater. The casing contained two screened sections, one extending between 11 and 15 ft bgs, and the other straddling the water table at between 2 and 6 ft bgs which is a shallower installation than would be recommended for most GCW applications. The second well, identified as the mKGB system, was a modification of the KGB design offered by IEG Technologies, Inc. This system was installed in an 8-inch well casing that was screened the same as the other design. The monitoring system included:

- 5 piezometers with 1-ft-long screens placed at the middle of the upper screen of each GCW
- 1 piezometer of similar design with the screen placed at the middle of the lower screen of each GCW
- 8 tri-level groundwater-monitoring points placed varying distances from the wells with the probes located at 9, 12, and 15 ft bgs.

The wells were equipped with sampling ports at the upper and lower screens of each well and a sampling port for collecting samples of the system off-gas.

The bioventing component of the system consisted of 8 dual-level soil gas monitoring points placed at the same locations as the groundwater sampling points. The probes were set at 2 and 4 ft. bgs. The off-gas from the GCWs was directly injected into the vadose zone to provide aeration.

The demonstration lasted for 12 months. The MBW system was operated for the first 3 months and the mKGB system was operated for the remaining 9 months. Each system was operated at an airflow rate of 1 scfm, the maximum rate that did not result in excessive discharge of contaminant vapor from the ground surface. Monitoring included the following:

- collection of initial soil and groundwater samples, and analyses for hydrocarbons and dissolved oxygen (DO) in the groundwater samples
- a bromide tracer test to determine the radius of influence (ROI) in the aquifer
- extensive sampling of GCW influent and effluent with analyses for hydrocarbons, and of off-gas with analyses for hydrocarbons, oxygen, and carbon dioxide
- sampling and analysis of soil gas for hydrocarbons
- 5 respiration tests in the vadose zone to monitor biological activity
- surface emission testing and analyses for hydrocarbons.

The overall conclusions from this demonstration were that these two technologies could be effectively coupled to treat hydrocarbon contamination at this site and that the coupled technologies had potential for application at other sites. In addition, several observations were made about the performance characteristics of the GCWs in general. First, Based on the results of the bromide tracer test, it was determined that the wells did achieve the 25-foot ROI; however, there was rapid communication between the two screens (2 minutes), whereas it took much

longer (up to 3 months) for water to circulate throughout the circulation cell. This resulted in a high rate of circulation and a rapid decrease in the hydrocarbon concentration in the influent to the wells, which meant that a significant portion of the energy was going to circulating clean water close to the well.

A second observation was that the air lift pump was effective at stripping contaminants from the aqueous phase and at oxygenating the water as it moved through the well. The influent DO was consistently below 1 mg/L, while the effluent DO was consistently greater than 5 mg/L. Although this aeration efficiency was promising, the oxygen demand in the aquifer rapidly depleted the oxygen and no increased DO was observed in any of the monitoring points, even at only five feet from the wells. Further, because much of the delivered oxygen remained in the system off-gas, and the rate of mass delivery was low, the GCW in this application was not deemed an efficient method for supporting aerobic biodegradation in the aquifer.

An attempt was made to determine the groundwater pumping rate by conducting a mass balance on total petroleum hydrocarbon (TPH) and 11 molecular weight ranges of the contaminant entering and leaving the well. The following relationships were used.

$$\text{TPH Flux}_{inf} = \text{TPH Flux}_{eff} + \text{TPH Flux}_{off\text{-}gas}$$
$$\text{TPH Flux}_{inf} = \text{Water Flow Rate} \times \text{Conc}_{inf}$$
$$\text{TPH Flux}_{eff} = \text{Water Flow Rate} \times \text{Conc}_{eff}$$
$$\text{TPH Flux}_{off\text{-}gas} = \text{Air Flow Rate} \times (\text{Conc}_{off\text{-}gas} \times \text{CF})$$

where:

TPH Flux_{inf} = mass of TPH entering the well in the aqueous phase per unit time
TPH Flux_{eff} = mass of TPH exiting the well in the aqueous phase per unit time
$\text{TPH Flux}_{off\text{-}gas}$ = mass of TPH exiting the well in the vapor phase per unit time
Water Flowrate = volume of water entering or leaving the well per unit time
Air Flowrate = volume of air injected into the well per unit time
Conc_{inf} = mass of contaminant per unit volume of influent water
Conc_{eff} = mass of contaminant per unit volume of effluent water
$\text{Conc}_{off\text{-}gas}$ = mass of contaminant in system off-gas on a ppm basis
CF = conversion factor to convert ppmv to mass per unit volume

Hydrocarbon concentrations were measured in influent, effluent, and off-gas samples. The airflow rate was set at 1 scfm. The only unknown was the water flowrate. The results from this exercise calculated an average flowrate of 4.53 L/min with a coefficient of variance (C.V.) of 69 percent. The large variability may have been the result of sampling from a single sampling probe located at the influent screen of the GCW. This may not have provided a representative sample of the water entering the well. If this method is to be used to determine pumping rates, the samples must be collected from within the well after mixing of the influent water, but before any air stripping or other treatment occurs. The variability in the results using a single sampling probe outside the influent screen showed that this method was not accurate enough to use for monitoring pumping rates of GCWs.

March Air Force Base

In 1993 through 1994, a demonstration of the UVB technology was conducted at March Air Force Base in Riverside, California. The EPA SITE Program evaluated the performance of the system over the first 12 months of the demonstration. The system was operated for an

additional 6 months for further evaluation. The participating vendors included IEG Technologies Corporation, Roy F. Weston, Inc., and Black & Veatch Waste Science, Inc. The primary objective was to evaluate the feasibility of using the UVB technology for removing chlorinated VOCs, primarily TCE, from the groundwater at March AFB, and to evaluate the cost effectiveness of the technology. The information presented below, as well as more information describing this demonstration, can be found in EPA SITE Programs report EPA/540/R-95/500a and Bannon et al, 1995.

The demonstration was carried out at Site 31, an unclassified solvent disposal site that is within OU 1 at March AFB. In general, the geology at the site is alluvial and fluvial deposits consisting of laterally discontinuous units of fine-grained sediment dominated by fine-grained sand and silt. The depth to groundwater was approximately 40 feet and groundwater flow direction was toward the south with an average gradient of 0.007. The average hydraulic conductivity was calculated at 90.5 gpd/ft^2, the effective porosity at 27.2%, and the transport velocity at 0.31 ft/day.

An initial site characterization that consisted of collecting on continuous core to a depth of 118.5 feet and analyzing the core for geochemical, chemical, microbiological, and lithological parameters was performed. The results of the lithologic analysis showed that there was a zone of low permeability at approximately 85 feet bgs, so the well was designed and installed above this depth.

The system included one 16-inch-diameter UVB well installed to 87.5 feet bgs with a 26-inch bucket auger. The well was operated in an upflow mode and contained a submersible pump and an air stripping chamber. The well was equipped with three 2-inch PVC monitoring wells placed in the annulus of the well borehole; one well was screened across the influent section and the two other wells were screened across the effluent section of the UVB. These wells monitored influent and effluent volatile organic compound (VOC) concentrations. A total of 13 groundwater-monitoring wells were sampled: 9 within the expected zone of influence, 3 below the zone of influence, and one outside the zone of influence. Off-gas was treated aboveground using activated carbon. Off-gas samples were collected from sampling ports placed before the aboveground treatment system.

Performance monitoring included sampling and analysis of the influent to and effluent from the UVB well, of the groundwater from the 13 monitoring wells, and of the system off-gas. Approximately 165 sets of influent and effluent water samples were collected and analyzed for VOCs, metals, minerals, and other water quality parameters. Groundwater samples were collected monthly for the first 6 months, then bimonthly for the remainder of the demonstration. These samples were monitored for VOC concentrations, DO, temperature, specific conductance, and pH. System off-gas was monitored for VOC concentrations, linear flow velocity, vacuum/pressure, relative humidity, and temperature.

The results from the groundwater sampling and analysis indicated that the TCE concentrations in the wells within the predicted capture zone decreased approximately 52% after 12 months and 62% after 18 months of operation. Over the 18 months, TCE concentrations decreased from an initial range between 160 and 1,000 μg/L to a range between 45 and 270 μg/L. TCE concentrations in monitoring wells screened below the capture zone all showed an increase. The TCE concentration in the one well outside of the capture zone did not change significantly during the 18-month operational period. The trends in TCE reductions in the 6 monitoring wells sampled over the 18-month duration showed a greater impact in wells closer to

the UVB well. Results from O_2 and CO_2 monitoring suggested no enhancement of aerobic biological activity with the operation of the UVB.

The data trends in the TCE concentrations over time and with increasing distances from the UVB well suggest that the UVB was effective at reducing TCE concentrations and that nine wells were within the circulation cell. The furthest of these nine wells was located 90 feet from the UVB. The design circulation cell was 110 feet. The closest well outside of the design circulation cell was approximately 240 feet from the UVB well and showed no response to the operation of the UVB. Because there was a definite effect at 90 feet, it was assumed with some confidence that the actual diameter of the circulation cell was at least 90 feet. The SITE program evaluation did not support the use of variations of target concentrations in the monitoring wells for determining the ROI due to variables that were independent of the UVB system. Their evaluation did suggest that the data trends showed homogenization of the contaminant in the groundwater.

Several methods were used to determine the ROI of the circulation cell. Groundwater modeling results indicated an 83-ft ROI, which is close to the observed radius based on the TCE concentration trends. A dye tracer test resulted in recovery of dye 40 ft from the well in the downgradient direction, but no recovery was achieved at 40 ft in either the upgradient or cross gradient directions. These results indicate that the actual ROI may have been significantly less than was indicated by the trends in contaminant reductions or the modeling effort.

The SITE Program evaluation of the well performance showed that the well achieved greater than 94% average removal efficiency for TCE during the first 12 months of operation. During this period, the influent concentrations ranged between 14 and 220 μg/L, with an arithmetic mean of 56 μg/L. The mean TCE concentration in the effluent over the 12 months was 3 μg/L. The 95% upper confidence limit concentration was 6 μg/L, which translates into an 89% removal efficiency.

An attempt was made to estimate the mass of TCE removed by the UVB system. Calculations were made based on the water and on the gas-phase concentrations. A TCE mass removal rate of 10 grams per day was calculated based on the difference between the influent and effluent concentration and using a pumping rate based on pump performance. The mass removal rate calculated based on the off-gas TCE concentrations and flowrate was 0.1 grams per day.

The large discrepancy between the TCE mass removal rates calculated on the aqueous and gaseous-phase concentrations reveals two problems with the approach. First, taking one influent sample from one side of the GCW does not provide a representative sample of the water entering the well. Contaminant is never evenly distributed around a GCW. This combined with the heterogeneity within the zone of influence results in varying contributions in terms of flow and concentration to the GCW in three dimensions. The collection of unrepresentative samples will lead to error in mass removal and stripping efficiency calculations. Multiple samples from a location after mixing has occurred, must be taken to accurately estimate either of these parameters.

Another concern raised by discrepancy in the TCE mass removal rates is the need to accurately determine groundwater-pumping rates. Inaccurate estimation of pumping rates would affect the calculation of mass removal rates. One of the advantages of GCW configurations that use mechanical pumps is that pump performance curves provide a viable method for determining

pumping rate. To do this requires accurate measurements of pressures or head loss. Although these parameters were monitored during this demonstration, sufficient detail was not available to evaluate this method. The real challenge is to determine pumping rates in air lift GCW systems, where surging and mixed fluids make traditional flowrate measurements difficult or even impossible.

System costs were estimated by the SITE program as follows:

- Capital costs for single treatment unit $180,000
- Operation and maintenance (1st year) $ 72,000
- Operation and Maintenance (subsequent years) $ 42,000

Based on these estimates, the costs for 1, 3, 5 and 10 years of operation were calculated to be $260,000, $340,000, $440,000, and $710,000, respectively. The costs for treating 1,000 gallons of water, the amount of groundwater pumped through the system, were estimated at $260, $110, $88, and $71 for 1, 3, 5, and 10 years, respectively. When evaluating these costs, it should be noted that between 60 to 90% of the water pumped through a GCW system is generally recirculated water.

Keesler Air Force Base

The U.S. Air Force Center for Environmental Excellence (AFCEE) sponsored a demonstration of the Density Driven Convection (DDC) technology at Keesler AFB in Biloxi, Mississippi. The purpose of this demonstration was to evaluate the effectiveness of the DDC system for reducing TPH in both groundwater and soil. Wasatch Engineering, Inc., the owner of the DDC technology, was responsible for pilot testing, scale-up, installation, operation, monitoring and evaluating their system. The information summarized below was taken from the Wasatch Environmental Inc., (1997) draft Final Report titled DDC *In-Well Aeration Technology Demonstration, Keesler Air Force Base, Biloxi, Mississippi.*

The demonstration site was a gasoline station where USTs that held diesel fuel and gasoline had leaked, resulting in soil and groundwater contamination. The soil at the site consisted of silty sand to a approximately 3 to 4 feet bgs, fine- to medium-grained sands to approximately 22 feet bgs, then clay below 22 feet bgs. The depth to groundwater was approximately 7 to 8 feet bgs (shallower than the generally recommended 10 feet or greater depth to the water table). The hydraulic gradient was 0.004 to 0.005 ft/ft to the east/northeast. The horizontal and vertical hydraulic conductivities were measured at 32 and 9.5 ft/day, respectively.

Soils in the immediate vicinity of the USTs had TPH concentrations as high as 21,000 ppm. TPH concentrations in the groundwater immediately below the UST location were as high as 9,900 ppm. It was estimated that up to 45,000 pounds of petroleum hydrocarbons were in the subsurface. The lateral extent of the contamination was approximately 150 feet by 225 feet in the soil and 275 feet by 600 feet in the groundwater. The plume had migrated to the east-northeast of the UST location.

A pilot test was conducted in late 1995 to collect required scale-up data. One DDC well and one SVE well were installed. The DDC well was operated for a period of 19 days; the SVE well was only operated for the first 10 days. During operation, tests were conducted to determine the radius of influence from the SVE well, the radius of the circulation cell, the groundwater pumping rate, and the stripping efficiency in the DDC well. The resulting values were 60 feet, 20 feet, 4 gpm, and >90% for each of these variables, respectively. These tests were by methods described in the following pages for the large-scale system (it is unclear how the radius of influence for the SVE well was determined).

The large-scale system was designed based on the pilot test data. The scaled-up system included 6 SVE wells and 32 DDC wells placed in an L-shaped pattern in the source zone area along the eastside and southeast corner of Building 1504. The SVE wells were constructed out of 4-inch PVC, and they were screened between 2 and 7 feet bgs. The DDC wells also were constructed of 4-inch PVC and were screened from 4 to 14 feet bgs and 16.5 to 21.5 feet bgs. Each DDC well had a piezometer installed at the upper and lower screened interval. The monitoring system included the piezometers installed in conjunction with the DDC wells, other piezometers installed during the pilot-scale test, and several monitoring wells installed prior to DDC testing.

The system was started up in May 1996 and operated for approximately 18 months. During this time, eight monitoring events were conducted, during which the following were monitored: water table elevations, groundwater contaminant and DO concentrations, influent and effluent contaminant and DO concentrations, the SVE off-gas flowrate, TPH, O_2, and CO_2 concentrations. The data were used to assess the performance of both the SVE and DDC components of the system.

Water table elevation measurements in the piezometers can be used to indicate groundwater circulation; however, data from only one piezometer pair was discussed in the technical report. The water levels in this piezometer showed the expected pattern for downward circulation with an increase in the head in the upper flow zone and a decrease in the head in the lower flow zone. The magnitude of the head developed by DDC operation at this location averaged between 2 and 3 feet. The water table elevations in the other piezometers and monitoring wells showed no significant impact. While these data would support the conclusion that the DDC system did not support circulation of groundwater at this site, the time series of elevation measurements showed significant variability. It may be possible that a more sensitive method for measuring water table elevations may have been able to detect small head responses that resulted from DDC operation. One way or another, the data illustrated the need for accurate monitoring if water table elevations are to be used to monitor groundwater circulation.

DO data indicated that the wells were effective at oxygenating the water as it passed through the well, with influent DO values in the range between 0.12 and 7.6 mg/L, and the effluent DO ranging between 6.8 to 9.7 mg/L. The groundwater DO data indicated that even though oxygenated water was discharged from the DDC wells, the system was not effective at oxygenating the groundwater. The average DO in the well influent was nearly 7.5 mg/L, suggesting that the well had significantly cleaned the aquifer close to the well. The report suggests that the DO in the aquifer increased during operation of the DDC wells. Unfortunately, the DO in the deep piezometers seemed to increase more than the DO in the shallow piezometers. This did not make sense since the oxygenated water discharged from the DDC wells should have impacted the DO concentrations in the shallow piezometers more than the deep ones. The graphical representation of the average DO concentrations showed significant

variations, especially for the deep piezometers. Unfortunately, the graph did not include error bars, so it was not possible to determine if the difference in DO levels was significant.

The removal of TPH was evaluated in both the soil and in the groundwater. The soil removal was based on changes in TPH and benzene, toluene, ethylbenzene, xylenes, and naphthalene (BTEXN) concentrations in soil samples taken from three boreholes. The three boreholes were located in close proximity to three different DDC wells and samples were pulled from 5, 7, 9-10, 11-15, and 19 feet bgs. The samples were collected during installation, then at 12 and 18 months during system operation.

The data showed that the average TPH concentrations in the soil samples decreased over the first 12 months of operation. Between month 12 and month 18, the concentrations at the 7-foot depth continued to decrease while the concentrations at the 9-10, 11-15, and 19-foot depths increased. The TPH concentration at 5 feet bgs remained unchanged during the 18 months of operation.

Reductions in TPH concentrations in the groundwater were assessed based on measurements in samples collected from one on-site piezometer, one on-site well, and two off-site wells (off the property and downgradient). During the 18 months of operation, the average TPH and BTEXN concentrations in the off-site wells was shown to fluctuate between approximately 5 and 35 ppm and 1 and 17 ppm, respectively. The average TPH concentrations in the on-site samples decrease from approximately 52 to 7 ppm. The BTEXN concentrations increased from approximately 4.8 ppm to near 20 ppm over the first 200 days of operation, then decreased to below 0.5 ppm by the end of the demonstration. While these changes in concentrations were promising, it was unfortunate that the average TPH and BTEXN concentrations were calculated from samples from only two wells, not a sufficient number to characterize the groundwater in the area influenced by the DDC system. In addition, there were no error bars included on the charts showing the TPH and BTEXN concentrations over time and no statistics were presented showing if the observed decreases were significant.

An attempt was made to calculate the mass of hydrocarbon removed over the 18 months that the DDC system was operated. The calculation was based on the following four assumptions.

1. The pumping rate in the pilot-scale DDC well was representative of all of the DDC wells.
2. The stripping efficiency of the pilot-scale DDC well was representative of all of the DDC wells.
3. The average influent and effluent D.O. concentrations in the pilot-scale DDC well was representative of all of the DDC wells.
4. The average influent concentration of dissolved hydrocarbons in all DDC wells was equal to the average TPH concentration in samples collected from 3 on-site monitoring locations.

Based on these assumptions, the estimated removal rates were 2.4 pounds of hydrocarbon contamination per well per day, for a total removal of 15, 767 pounds of hydrocarbon over the 18-month demonstration. Unfortunately, the assumptions used to make these calculations are invalid. The data presented in the report show large spatial and temporal variability in the contaminant concentrations and to assume that three locations represented the influent concentrations to all 32 DDC wells was not valid. The contaminant concentrations in

the influent to each well should have been measured and the validity of this assumption should have been validated. In addition, assuming that the stripping efficiency was the same in each well, and that it remained constant over time with changing concentrations and TPH composition was incorrect. The influent and effluent concentrations should have been periodically measured to more accurately calculate stripping efficiencies.

Overall, there is evidence that the DDC wells did remove hydrocarbon contamination from the soil and groundwater at the site at Keesler Air Force Base. Unfortunately, the system was either not monitored properly, or only selected data was presented in the report to produce optimum performance. Because there was no explanation provided on the reasoning for using limited data to make concentration and mass removal calculations, and because there were no error bars or statistics included, it was difficult to assess the significance of any reductions. Finally, the assumptions used in the mass removal calculations were not valid and the estimate of removal could not be accepted as accurate. These short fallings strongly illustrate the importance of system monitoring and contaminant data collection for effective and accurate system performance evaluation.

Edwards Air Force Base

In 1995, the Department of Energy (DOE) sponsored a demonstration of the NoVOCs system at Edwards AFB, California. The primary objective of this demonstration was to determine the systems effectiveness in removing VOCs from groundwater. Secondary objectives included optimizing system operation, determining the radius of influence, identifying system effects on the subsurface, determining the achievable level of cleanup, comparing the NoVOCs to pump-and-treat, and determining the cost to operate. The demonstration was originally planned for DOE's Hanford site in Washington, but due to budgetary constraints, it was moved to Edwards AFB. More detailed information on this demonstration can be found in Gilmore et al., 1996 and White and Gilmore, 1996.

The demonstration was conducted at Operable Unit 1, Site 19. Historic activities at the site, including cleaning of experimental aircraft, had resulted in VOC contamination, primarily TCE, in the groundwater. Site 19 was selected based on available contamination and site hydrogeologic data. The VOC contamination at the site, and the good hydraulic conductivity and low hydraulic gradient suggested that Site 19 would serve for a demonstration site. Prior to proceeding with the demonstration, a more detailed chemical and hydrogeologic investigation was conducted to verify the presence of VOCs, identify low-permeability zones, and to more accurately determine the vertical and horizontal hydraulic conductivities. The demonstration was conducted as an interim cleanup action as part of the CERCLA process at the site.

The soils at the site included approximately 50 feet of alluvial and lacustrine deposits that consisted of sand with gravel and smaller fractions of caliche, silt, and clay. The stratigraphy within these deposits was discontinuous. Highly fractured bedrock was encountered at 50 feet. Groundwater was encountered at 25 feet bgs. The aquifer was approximately 25 feet thick with porosity ranging between 0.155 and 0.313. The vertical and horizontal hydraulic conductivities were 1 ft/d and 10 ft/day, respectively. The horizontal and vertical gradients were 0.005 and 0.1, respectively. The average linear velocity of the groundwater was 0.2 ft/d. TCE concentrations at the site averaged 300 μg/L, with a high concentration of 502 μg/L. The higher TCE concentrations occurred near the base of the alluvium.

The demonstration system consisted of two GCWs, five monitoring wells, three piezometers, five flow sensors, two characterization wells, and two existing CERCLA monitoring wells. The GCW was placed in the center and the other monitoring network components were placed in various directions and distances from the well. Although two GCWs were installed, only one (D2) was used to treat groundwater, the other (D1) was used for monitoring. The original design of D2 included a 6-inch casing installed to 50 feet bgs with a screened interval between 40 and 50 feet bgs. A 10-inch casing was placed over the 6-inch casing to a depth of 20 feet bgs with a screened interval between 3 and 18 feet bgs. The result was a 22-foot spacing between the upper and lower screened intervals. A 2-inch access tube was installed to between 45 and 50 feet bgs to monitor the intake zone of D2. The well was modified to include a 4-inch eductor pipe that was installed through the center of the 6-inch casing. The 6-inch casing was cut off just above the lower end of the 10-inch casing and a packer was installed between the 6-inch casing and the 4-inch eductor pipe.

The five monitoring wells, identified as M1 through M5, were designed and installed to sample groundwater and to make pressure-head measurements. Each monitoring well consisted of 2, 2-inch stainless steel casing strings with the deep casing screened between 45 and 50 feet bgs and the shallow casing screened between 30 and 35 feet bgs. Bentonite seals were used to isolate the two screened intervals from each other. The wells were placed 50 feet upgradient and downgradient, and 10, 30, and 50 feet crossgradient from the GCW.

The piezometers were used to monitor changes in the water table elevation around the GCW during operation. They consisted of heavy-gauge, 1-inch diameter steel tube that was pushed to 28 feet bgs. The end of the tube contained a 1-foot long screen. Two piezometers were placed 5 feet crossgradient, and one well was placed 10 feet upgradient, from the GCW.

Five flow sensors, designed to give both the direction and magnitude of groundwater flow, were installed in three boreholes. Flow sensors were placed at 32.5 and 47.5 feet bgs in two of the boreholes and at 47.5 feet bgs in the other borehole. The boreholes were located between 17.5 and 50 feet from the GCW. These sensors use a thermal perturbation technique to directly measure the direction and magnitude of the full three-dimensional groundwater flow-velocity vector in unconsolidated, saturated, porous media (Ballard 1996). The instrument is a device that essentially heats the groundwater as it flows across the probe. Relatively cool temperatures are observed on the upstream side; warmer temperatures on the downstream side. The temperature distribution around the probe is a function of the direction and magnitude of the groundwater-flow velocity past the cylinder.

The two characterization wells were installed during site characterization activities. Each well consisted of a 4-inch casing string with two screened intervals, 30 to 35 and 45 to 50 feet bgs. The CERCLA monitoring wells were constructed of 4-inch-diameter PVC casing with stainless steel screens. One well was screened from 19.5 to 39.5 feet bgs. The other well was screened in the bedrock from 60 to 70 feet bgs.

The system was operated for 191 days between January 16 and July 25, 1996. During operation, system monitoring included several methods for measuring pumping rate, off-gas monitoring, groundwater velocity measurements, and groundwater sampling and analysis. Groundwater sampling and analysis continued for an additional two months.

Several methods were investigated for their ability to measure the pumping rate of the GCW. These included a downhole weir, and orifice plate device, use of empirical operating

curves, and measuring the recharge rate. Of these methods, it was determined that the recharge rate provided the most accurate measurement of flow through the system. The downhole weir and the empirical equations were calibrated and developed in the laboratory, respectively, using a full-scale model of the well. Unfortunately, the laboratory flowrates were higher than the flowrate observed in the field and neither of these methods had the required resolution. The orifice plate suffered because of the surging action of air lift pumping and did not provide an accurate flow measurement. While the recharge rate method was believed to be the best of the four methods, the flowrate measured with this method was conservative because the downward gradient was larger during system operation than the flow when the elevation curves were developed (see Gilmore et al., 1996).

The system off-gas was monitored for VOC and CO_2 concentrations using an infrared photoacoustic spectrophotometer. Groundwater velocity and direction were measured using the in situ flow sensors as previously described. Dissolved oxygen, pH, and temperature were measured using a H2OG hydroprobe™. Groundwater samples were collected using a bailer technique for VOC analysis.

During operation, the reinfiltration rate decreased. This was attributed to clogging problems from fine particles and dispersive clays. This illustrates the necessity for thoroughly developing both the influent and recharge section of these wells prior to operation, and the importance that the water chemistry has on the potential operation of the system. The infiltration capacity was regained by and the well was redeveloped using a combination of physical and chemical techniques.

The concentration of TCE in the groundwater was significantly reduced over the 6 month operational period. TCE concentrations in the upper zone were reduced from between 160 μg/L to 34 μg/L to below the regulatory drinking water MCL limit of 5 μg/L. The TCE removal rate was highest in the monitoring wells closest to the GCW. In the deep zone, TCE concentrations decreased in one of the monitoring wells from 290 to 173 μg/L. The trends in TCE reduction between monitoring wells indicated that the circulation cell was asymmetrical and that reinjected water short-circuited around the well. Post operational data showed the TCE concentrations to rebound in the monitoring wells with the fastest rebound occurring in the well that was furthest from the GCW in the upgradient direction.

The recharge rate method for determining the pumping rate resulted in a rate of 10 gpm. The flowrate was maintained between 7 and 8 gpm, and the stripping efficiency averaged approximately 90%, after the system was modified. A third blower was added and the air injection point was raised from 20 feet below the water table to 8.5 feet below the water table and the air to water ratio was increased from approximately 29:1 to 53:1. The data from the in situ flow sensors indicated a zone of influence as far as 35 to 50 feet crossgradient to the direction of groundwater flow. The sensors registered both a horizontal and vertical component of flow. The vertical component in the sensor located 50 feet from the GCW was observed after 90 days of system operation. The response in the flow sensors diminished with increased distance from the well. Based on the sensor data and a mass balance approach for calculating the percentage of recirculated water, the zone of recirculation was estimated at 30 feet.

The TCE concentrations in the shallow monitoring wells that were associated with the reinjection screen showed significant changes being reduced from between 34 and 156 μg/L to between 3 and 47 μg/L after 191 days of operation. TCE concentration reductions were not observed in the deep monitoring wells that were associated with the influent screen. The TCE

concentrations in the shallow monitoring wells showed significant rebound after the system was turned off, while the TCE concentrations in the deep monitoring wells remained fairly constant. There were no estimates of the mass of TCE removed during the demonstration.

Overall, it was concluded that the system was successful at removing volatile organic contamination from the groundwater and that the system operated very efficiently. Although the flowrates in the aquifer were lower than the design flowrates for the in situ flow sensors, they did provide data that showed circulation. It was determined that a low permeability layer at 44 feet bgs appeared to limit circulation. In addition, numerous modifications were made to the system during testing. While this was a pilot demonstration, the problems encountered, the modifications made to the system, and the results from these modifications, highlight the importance of thorough site characterization, pilot-scale testing, and proper design for full-scale application.

Massachusetts Military Reservation

In 1996, the Air Force Center for Environmental Excellence (AFCEE) funded a GCW technology demonstration at the Massachusetts Military Reservation (MMR) on Cape Cod, Massachusetts. The demonstration included two GCW configurations, the UVB and NoVOCs. Jacobs Engineering Group served as AFCEE's remedial design contractor, managed the demonstration effort. AFCEE contracted Parsons Engineering Science, Inc., to provide an independent expert panel review of the data generated during this effort. The following is a summary of the demonstration and the results and the conclusions reached by the expert panel. More detailed information can be found in Jacobs Engineering Group, Inc. 1996 and 1997, and Parsons Engineering Science, Inc. 1997a and b.

The demonstration was conducted at Chemical Spill No. 10 (CS-10). An additional UVB system was installed at Ashumet Valley, another site at MMR, but the contaminant concentrations were too low to allow an adequate evaluation of the technology at that site. For that reason, only the demonstration at CS-10 will be discussed in this document.

Between 1960 to 1973, the Air Force used CS-10 for maintenance of ground-to-air missiles. Since 1978, the site was used by the U.S. Army National Guard as a Unit Training Equipment Site for maintenance of armored and wheeled vehicles.. as a result of these activities, the primary groundwater contaminant at CS-10 is TCE, with concentrations as high as 2,800 μg/l. Much lower concentrations of PCE, 1,2-DCE and benzene were also detected at CS-10.

The stratigraphy at CS-10 consisted of fine- to coarse-grained sand to approximately 165 feet below sea level, then very fine sand, silt, and/or clay to approximately 180 feet below sea level at which depth bedrock was encountered. The depth to groundwater was approximately 30 feet and the aquifer was approximately 200 feet thick. The estimated horizontal hydraulic conductivity was 144 to 230 feet per day, the hydraulic gradient was 0.002 and the groundwater migration rate was 1.0 to 1.5 feet per day.

CS-10 was divided into two sections, CS-10 North and CS-10 South. The UVB system was installed and demonstrated at CS-10 North, the NoVOCs system was installed and demonstrated at CS-10 South. Each system included two recirculation wells. The UVB wells were modified to support 2 circulation cells by nesting an upflow system and a downflow system

in the same well. The NoVOCs well was a modified upflow system that supported a single circulation cell.

The UVB system was designed, constructed, and operated by SBP Technologies, Inc. The system consisted of two circulating wells that were designed to induce two stratified circulation cells that covered the 120-foot thickness of the plume. The wells were installed to a depth of 250 feet. Each well was designed with four 10-foot long screens; two 0.015 slot screens for extraction and two 0.030 slot screens for reinjection. More detailed information on the design of the UVB system can be found in *Final CS-10 Recirculating Well Pilot Test Execution Plan.*(Jacobs Engineering Group, Inc. 1996).

The NoVOCs system was designed, constructed, and operated by Metcalf & Eddy, Inc., under agreement with EG&G Environmental. The design included two dual-screen/dual-casing wells that each imparted a single circulation cell. The wells were installed to a depth of 225 feet and covered the 100 foot thickness of the plume. The extraction screens were located at the base of the plume. The extraction screen of the outer casing consisted of a 15-feet long 0.020-slot screen. The inner casing contained a 20 foot-long 0.210-slot screen. The reinjection screens were located at the top of the plume and consisted of a 15-foot long 0.020-slot screen in the outer casing only. The wells used air lift to facilitate groundwater pumping. More detailed design information can be found in *Final CS-10 Recirculating Well Pilot Test Execution Plan* (Jacobs Engineering Group, Inc. 1996).

A groundwater-monitoring network was designed with 8 multiple-depth well clusters and 3 piezometers placed in the upstream, downstream, and crossgradient directions. Three additional monitoring well clusters were installed at each site. Five rounds of samples were collected from the wells and/or piezometers over the first six months of operation. The systems were operated for several additional months and a subsequent round of samples was taken. Field measurements were made of the water level/piezometric head, pressure head, pH, temperature, conductivity, dissolved oxygen, and redox potential. Samples were sent of for laboratory contaminant analysis. Overall, this was one of the most closely monitored GCW demonstrations to date. A complete list of the monitoring activities can be found in *Final CS-10 Recirculating well Pilot Test Execution Plan* (Jacobs Engineering Group Inc. 1996).

The operational parameters for the two systems were as follows.

Parameter	UVB (CS-10 North)	NoVOCs (CS-10 South)
Pumping Rate Well 1	40 gpm (12/21/96 – 2/5/97) 60 gpm (2/6/97 – 4/14/97)	180 gpm
Pumping Rate Well 2	40 gpm (12/21/96 – 2/5/97) 60 gpm (2/6/97 – 4/14/97)	150 gpm
Airflow Rate Well 1	850 – 1150 ft^3/min	NA
Airflow Rate Well 2	830 – 1100 ft^3/min	NA
Air to Water Ratio	135:1 (approximate)	20:1 (design)
Stripping Efficiencies:	UVB 1 – 82 to 97% UVB 2 – 78 to 97%	NoVOCs 1 – 85 to 94% NoVOCs 2 – 88 to 92%

The placement of the two GCW at both the CS-10 North and CS-10 South sites was designed to be perpendicular to the groundwater flow direction. During the early stages of the demonstration, the direction of groundwater flow was determined to be different than the

anticipated direction. As a result, the circulation wells were not perpendicular to flow and the monitoring wells also were not perpendicular to the groundwater flow. This necessitated the installation of an additional 6 monitoring wells at each site. The improper placement of the GCW systems may have been avoided had the proper site characterization procedures been followed.

The systems were run for a total of 18 months. Groundwater samples were collected over the duration of the demonstration and analyzed for the suite of parameters described above. Jacobs Engineering Group, Inc., reviewed the data from both GCW systems and arrived at the following conclusions regarding the performance of the GCWs regarding mass removal.

UVB System

- Effluent concentrations did not reach the pilot test target of 1 μg/L
- TCE concentrations in the upper zone associated with the reinjection of treated water were below 5 μg/L before system operation, and below generally quantification levels during operation.
- In the middle zone associated with the extraction screens, the TCE concentration remained relatively constant at approximately 1,200 μg/L.
- TCE concentrations in the lower zone that were as high as 3,900 μg/L were reduced to between 45 and 440 μg/L.
- Stable TCE concentrations in wells monitoring the extraction zone of the upper well indicated that there was poor recirculation in the upper circulation cell.
- After 5 sampling rounds, TCE reductions in the lower cell ranged between 54 and 91 percent.
- PCE and DCE concentrations in the effluent were reduced to below detection levels. PCE and DCE concentrations in the monitoring wells were reduced by 32 and 46 percent, respectively.
- The data strongly suggested the assessment that contaminant reduction did occur downgradient from, and in between, the UVB wells.

NoVOCs System

- Effluent concentrations did not reach the target of 1 μg/L.
- TCE concentration in the upper zone remained at non-detect levels for the duration of the pilot test.
- TCE in the reinjection zone between the two circulating wells was reduced from 2,700 μg/L to approximately 100 μg/L.
- TCE concentrations in the extraction zone remained relatively stable at approximately 1,300 μg/L. This was determined to be consistent with recirculation and the concentration was representative of the influent concentration to the well.
- After 5 sampling events, TCE concentrations in monitoring wells reduced by between 42 and 97 percent.
- TCE concentrations in the lower zone increased by 241 percent which was determined to indicative of recirculation.
- PCE and DCE concentrations were reduced to below detection levels in the effluent from the NoVOCs wells. PCE and DCE concentrations in the monitoring wells were reduced by 68 and 80 percent, respectively.
- The results strongly supported the assessment that contaminant reduction did occur downgradient and in between the two NoVOCs wells.

Because of differences in lithology, ambient TCE concentrations, and rates of contaminant reduction, Jacobs determined that it was not possible to make a "head-to-head" comparison between the two systems. As far as overall mass removal, the UVB system removed an estimated 40 pounds of TCE over 153 days at 97% operation. The NoVOCs system removed approximately 325 pounds of TCE over 157 days at 80% operation. It should be noted that the TCE concentrations at the NoVOCs site were significantly higher than at the UVB site and that the NoVOCs system employed a higher pumping rate when comparing the mass of TCE removed by each system.

Jacobs Engineering Group, Inc., came to the following conclusions regarding the development of a circulation cell.

- Modeling results indicated that lithologic zones with vertical hydraulic conductivities less than 1.5 ft/day did not allow for effective recirculation.
- Zones of vertical anisotropy greater than 10 resulted in ineffective upgradient capture for those portions above an extraction screen.
- Significant contaminant reductions in low hydraulic conductivity zones with high TCE concentrations were not observed. An extended monitoring period would be required to accurately assess any changes in these zones.
- Contaminant reduction data and modeling results indicate that both recirculating well configurations functioned effectively in terms of capture zone in the absence of low hydraulic conductivity layers. When such layers are present, care must be taken when placing screens so as not to attempt to induce vertical flow across them.

AFCEE's expert panel reviewed the operational and performance data from both systems and made the following conclusions.

- The energy savings that may be realized with GCW systems at some sites were not realized at MMR because the water was essentially lifted to the surface. Although this is not typical with most GCW configurations, it was deemed necessary at MMR to achieve the one-pass criteria. Because the systems did not achieve one-pass treatment, the expert panel believed that multiple passes would be required which further reduced any energy savings at MMR.
- The benefit of GCWs not requiring an injection permit was seen as a regulatory loophole. The expert panel believed that the number of wells and the scale of application negated any benefit from this benefit. They also believed that an ETR system could be installed without pumping water above the surface without impacting the water table.
- The panel suggested that while the claim of increased mass removal may be valid for a DNAPL source area, it was not apparent at MMR where the concentrations were much lower than in source areas. The panel reviewed the contamination distribution data at MMR and could not find any evidence of a source area where GCWs would realize the increased mass removal advantage.
- Overall, the panel did not feel that GCWs offered any advantage over ETR at MMR. Although the panel did not perform a formal cost estimate, they believed that the costs of GCW treatment would be more than that of ETR. They made the suggestion that a detailed cost comparison be made to verify their belief.

In addition to the above conclusions, the panel pointed out several disadvantages that are inherent with GCW systems. Many of these disadvantages have been discussed in this document. The disadvantages described by the panel included the following.

- The establishment of a circulation cell is dependent on the hydrogeology that is difficult to characterize for GCW design. Proving circulation is also difficult. The panel pointed out that ETR is more easily and reliably pilot tested, modeled, implemented, and monitored.
- Demonstrating and proving the geometry of the capture zone is difficult.
- In-well co-current strippers are less efficient than counter-current strippers.
- Low efficiency stripping results in the need for more wells, more recycling, and reinjection of water above maximum contaminant levels.

The expert panel concluded that while GCWs may offer advantages over other pump-and-treat technologies at other sites, they afforded no advantage at MMR where they were designed to capture a dilute plume.

Oceana Naval Air Station

A pilot test of the NoVOCs GCW technology was conducted at RCRA solid waste management unit (SWMU) 24 at Oceana Naval Air Station in Virginia Beach, Virginia. The test was conducted by the Naval Facilities Engineering Command of the Atlantic Division of the Navy (LANTDIV), through its contractor CH2M HILL using the NoVOCs technology supplied by EG&G Environmental, Inc. More detailed information can be found in CH2MHILL 1997.

SWMU 24 is one of 17 sites at Oceana being investigated and remediated under a RCRA Corrective Action. The primary contamination at the site was caused by releases from a waste-oil bowser that was stored at the end of one of the buildings at the site. A RCRA Facility Investigation (RFI) was conducted at the site in two phases, in 1993 and 1994. In 1995, the Navy conducted a Corrective Measures Study (CMS) of SWMUs 2E, 15, and 24 to determine the best approach to site remediation. The CMS recommended downgradient monitoring and hot-spot remediation using innovative *in situ* technologies as the alternative for remediating groundwater at SWMU 24.

A Corrective Measures Study (CMS) recommended downgradient monitoring and hot-spot remediation using innovative in situ technologies as the alternative for remediating groundwater at SWMU 24. The CMS listed air sparging and GCW as two potential technologies to consider for hot spot remediation at SWMU 24. Several site conditions make the application of these technologies at SWMU 24 difficult, including shallow water table (3 to 8 feet, but most commonly at 5 to 6 feet), strong fluctuation in the depth of the water table (approximately a 5-foot range over a year), thinness of the shallow Columbia Group aquifer that is being remediated (approximately 18 to 22 feet thick), the presence of a fine silt from 0 to 6 feet. Of these factors, the presence of the water table at the interface between the upper silt and the sand aquifer presented the greatest challenge because the entire vadose zone is within the silt most of the year. Because of the low permeability of the silt, neither air nor water can flow readily through the vadose zone. Flow in the vadose zone is vital to air sparging, therefore GCW was selected.

The NoVOCs GCW was installed in July 1996. During the initial installation, the lower screen was installed from 20 to 25 feet and the upper screen was installed from 2 to 7 feet. After developing the well, EG&G Environmental found that it could not produce more than approximately 2 gpm from the lower screen because of the fine sediment at that depth, so they

reinstalled the treatment well at a new location a few feet away. This second well was installed completed with screen depth 14 to 19 feet, and the yield of the new treatment well was approximately 8 gpm.

Six piezometers were installed to monitor the performance of the treatment system. The piezometer pairs were installed 20, 40, and 60 feet from the treatment well. The piezometers were installed in six separate borehole in three pairs. The shallow piezometers were screened from 4 to 9 feet and the deep piezometers were screened from 20 to 25 feet. The intention was to screen the wells at the top and bottom of the aquifer and at approximately the same depth as the treatment well. However, the piezometers were installed at the same time and at the same depth as the first treatment well, so the deep piezometer screens were deeper than the deep screen of the second treatment well.

The treatment trailer was equipped with a blower for air lifting, a blower to induce a vacuum on the wellhead to remove vapors, a 55-gallon carbon canister to treat the air stream, and control monitoring equipment. Most initial problems during the field testing were related to the high water table and the acid dosing mechanism. Hydrochloric acid was added to the well between the two screen zones to keep iron and calcium from precipitating in the well and in the upper part of the aquifer near the well.

The NoVOCs well system began operating at on July 30, 1996 with an approximate flow rate of 7 gpm. Periods of down time comprised approximately 4 to 6 days over the 15-week test. The flow rate was reduced to 6 gpm on August 6 and to 5 gpm on August 13. The flow rate was decreased to help prevent excessive water mounding in the infiltration gallery. The estimated groundwater pumping rate was approximately 4.8 gpm after 8 weeks and 4.3 gpm after 13 weeks, even though air flow rate was not decreased after the second week. This suggested that some minor iron clogging occurred during the test.

The analytical data for volatile organics suggested that the system was effective in reducing the concentration of contaminants of concern during the 15 weeks of pilot test operation, within a presumed 40 foot ROI. Reductions in cis-1,2-DCE concentrations were approximately 99, 100, 95 and 94 percent in four of the monitoring wells, however, the concentrations rose in the deep piezometer at 40 feet and in the two piezometers at 60 feet. No increase was seen in more distant wells. Specific conductivity and chloride data was interpreted to suggest that circulation of groundwater originating at the treatment well extended beyond 60 feet.

No substantial increase in dissolved oxygen concentrations was observed except close to the treatment well. It was hypothesized that this probably was due to the natural geochemistry of the aquifer. The aquifer appeared to have a significant capacity to consume dissolved oxygen and buffer acid changes. The geochemical sampling in January 1997 demonstrated that the aquifer is a mildly oxidizing environment. Alkalinity, sulfate, and pH concentrations suggested that there is substantial microbial oxidation occurring in the treatment area.

The system seemed to function well after an initial period of field testing and adjustments, although the decreasing flow rate suggested that minor clogging occurred during the test. This problem would be solved by occasional maintenance to optimize long-term performance. The system did not appear to induce long-term changes in the piezometric head of the aquifer in the vicinity of the well, despite transient changes observed in the first few hours.

The researchers concluded that the results of the single-well pilot test at SWMU 24 suggest that this technology is suitable for wider application at the Oceana Naval Air Station, and that the technology appears to be particularly suitable for hot-spot remediation of relatively small areas.

Because of the concentration increases in three of the monitoring wells, a mass balance *estimate was made as an attempt to demonstrate that contaminants were not merely being driven* out from the GCW. This was calculated by contouring "before" and "after" concentration data based on depth-average concentrations at each location. At locations with a single well, the concentration was assumed to be representative of the entire aquifer. This was considered an assumption because the screens of the SWMU 24 monitoring well extend across most of the aquifer. At the piezometer pairs, an average of the shallow and deep aquifers was considered to be representative of the entire aquifer. One of the interpretations lead to a mass removal calculation of cis-1,2-DCE of 76% while a more conservative interpretation lead to 18% mass removal. Unfortunately, the contours were not based on enough data nor were there any reasonably placed outer monitoring wells to justify the interpreted contours and therefore the mass balance was not well substantiated.

Naval Air Station North Island

NoVOCs was accepted into the US Environmental Protection Agency's Superfund Innovative Technology Evaluation (SITE) program June 1995. The Navy expressed interest in technology, and Naval Air Station North Island (NASNI) was identified as a potential demonstration site. When recent budgetary constraints forced EPA to scale back the scope of this SITE project, the Navy agreed to consider an installation of NoVOCs at NASNI under the Navy Environmental Leadership Program (NELP), in cooperation with the Clean Sites Innovative Technology Program and the EPA Technology Innovation Office. A single-well NoVOCs system was operated at site 9 as a treatability test for CERCLA action under the DoD and serves as a innovative technology demonstration in support of EPA/TIO.

The system was installed near Area 1, Site 9 at NASNI. Selection of this location was decided upon from analysis of characterization data collected 1995 through 1997. The primary contaminants of concern in groundwater at this location are tetrachloroethylene (PCE), trichlorethylene (TCE), dichloroethylene (DCE), vinyl chloride (VC), and toluene. Total VOC concentrations are expected to be in the range of several mg/l.

The water table at this location is approximately 13-15 ft bgs and shows sands from 15 ft to a clay aquitard at 95 ft bgs. A resistant layer at 80 ft bgs is estimated to be a cemented sand layer. Water table fluctuations from tidal influence are greatest near the shore of North Island, and do not significantly affect the test area. The groundwater gradient is west-southwest at 0.0007 ft/ft inland and .0006 ft/ft near the shore. A lens of fresh water is centered under North Island, and is replenished continuously by percolation. This lens is 20 to 30 ft thick in the center, and is underlain by brackish water, which is denser. The horizontal hydraulic conductivity and transmissivity estimates seemed conductive to GCW at $1x10^{-3}$ to $4x10^{-2}$ cm/sec and 0.3 to 0.8 ft/min respectively.

The project was delayed due to various regulatory, monetary, and technical difficulties. The NoVOCs technology was sold by EG&G to a new vendor, MACTEC, just prior to installation of the NoVOCs well and the project team changed as a result. During the initial well installation a silt layer was encountered that bisected the treatment zone. It was feared that this

layer would disrupt the formation of the circulation zone, so the well was redesigned to treat only the portion of the aquifer that was below the silt layer at 36 ft bgs and above a cemented sand layer encountered at 80 ft bgs. This required a new GCW design that discharged to the saturated zone rather than the vadose zone.

The NoVOCs well and the associated monitoring wells were installed at NASNI in early 1998. The NoVOCs well design was altered after initial installation but the system continued to be plagued by various operating problems. Numerous shutoffs occurred because of high water levels in the well and there was a suspected iron fouling problem. A series of hydrogeologic tests were conducted in Summer 1998 to determine if the operating problems were due to well design or aquifer conditions. The tests included shallow and deep aquifer step drawdown tests, shallow aquifer long term drawdown and recharge tests as well as a dipole test. The dipole test comprised pumping groundwater from the lower screen interval at a constant rate and reinjecting it out of the upper screen interval in order to evaluate flow through the NoVOCs system and the anisotropy of the aquifer. The resulting data showed that circulation rates above 30 gpm could not be achieved and that immediately after a thorough redevelopment well efficiencies could sustain 22 gpm.

It was also determined that the initial well design needed to be modified to allow for more efficient air-water separation and a sequestering agent should be added to the system to minimize metal precipitation. Significant biological growth was noted during well redevelopment activities, so a periodic biocide treatment was also added to the operation of the system. The internal components of the NoVOCs well were redesigned and installed in Sept. 1998. The well then underwent a shakedown period to optimize operation. Unfortunately the system is still experiencing problems with high water pressure building up in the recharge zone and the system has been unable to operate for sustained periods of time. As a result of this inconsistent operation, the dye tests planned at this site have not been initiated yet and much of the monitoring program has been put on hold.

At a November 1998 reevaluation meeting attended by all participants it became apparent that, until the discharge losses due to plugging by iron precipitation and bio-fouling were managed, the system could not perform effectively. Moreover, MACTEC expressed reservations regarding the recharge screen design that in effect casts doubt as to the potential for a successful demonstration even given resolution to the plugging problem. As of this writing, the prudence of continuing the demonstration at NASNI is being evaluated.

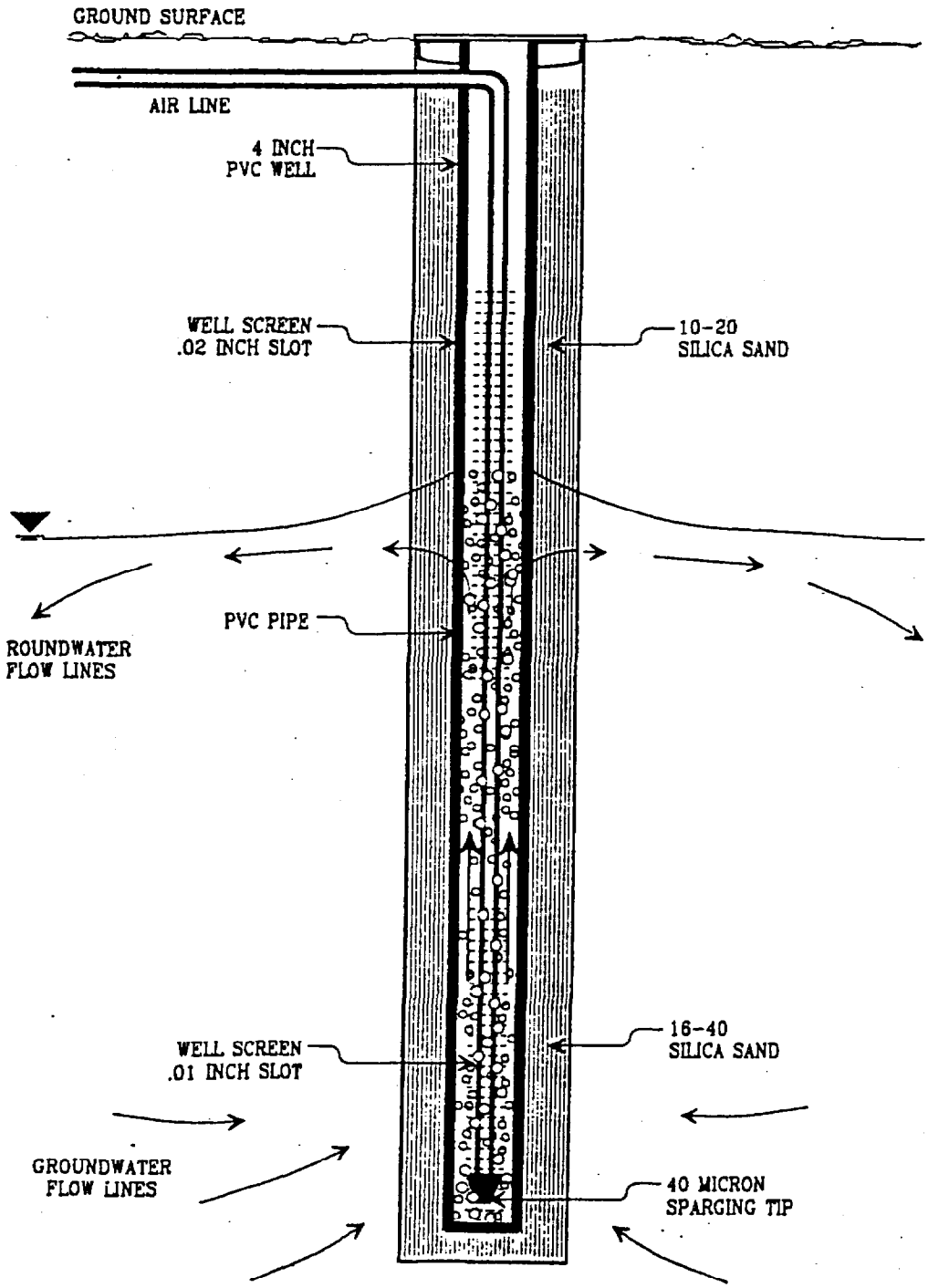

Figure 2 **Schlematic of the Wasatch Environmental, Inc. Density Driven Convection GCW System**

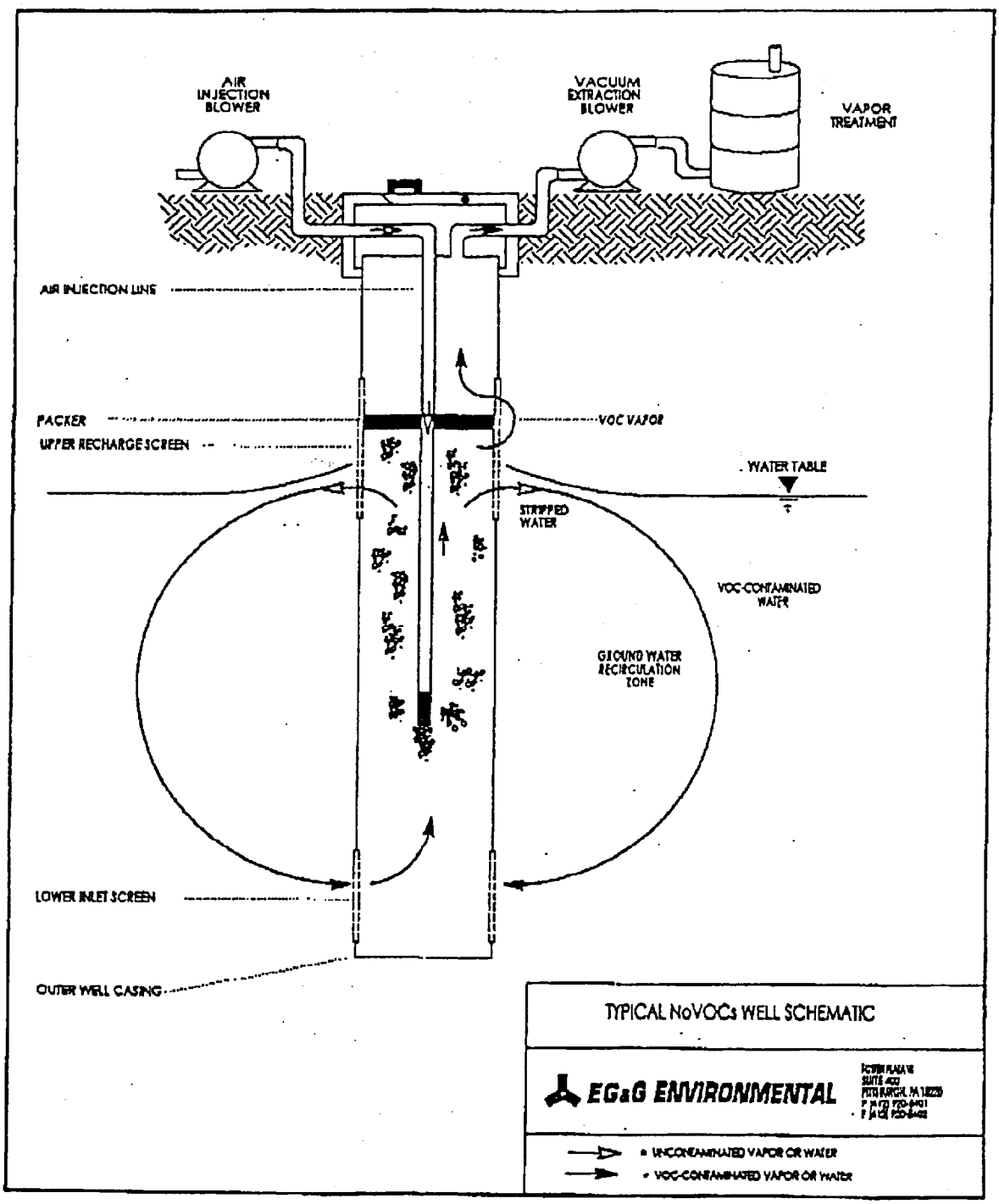

Figure 3 **Schematic of the MACTEC Standard NoVOCs Groundwater Circulating Well Systems**

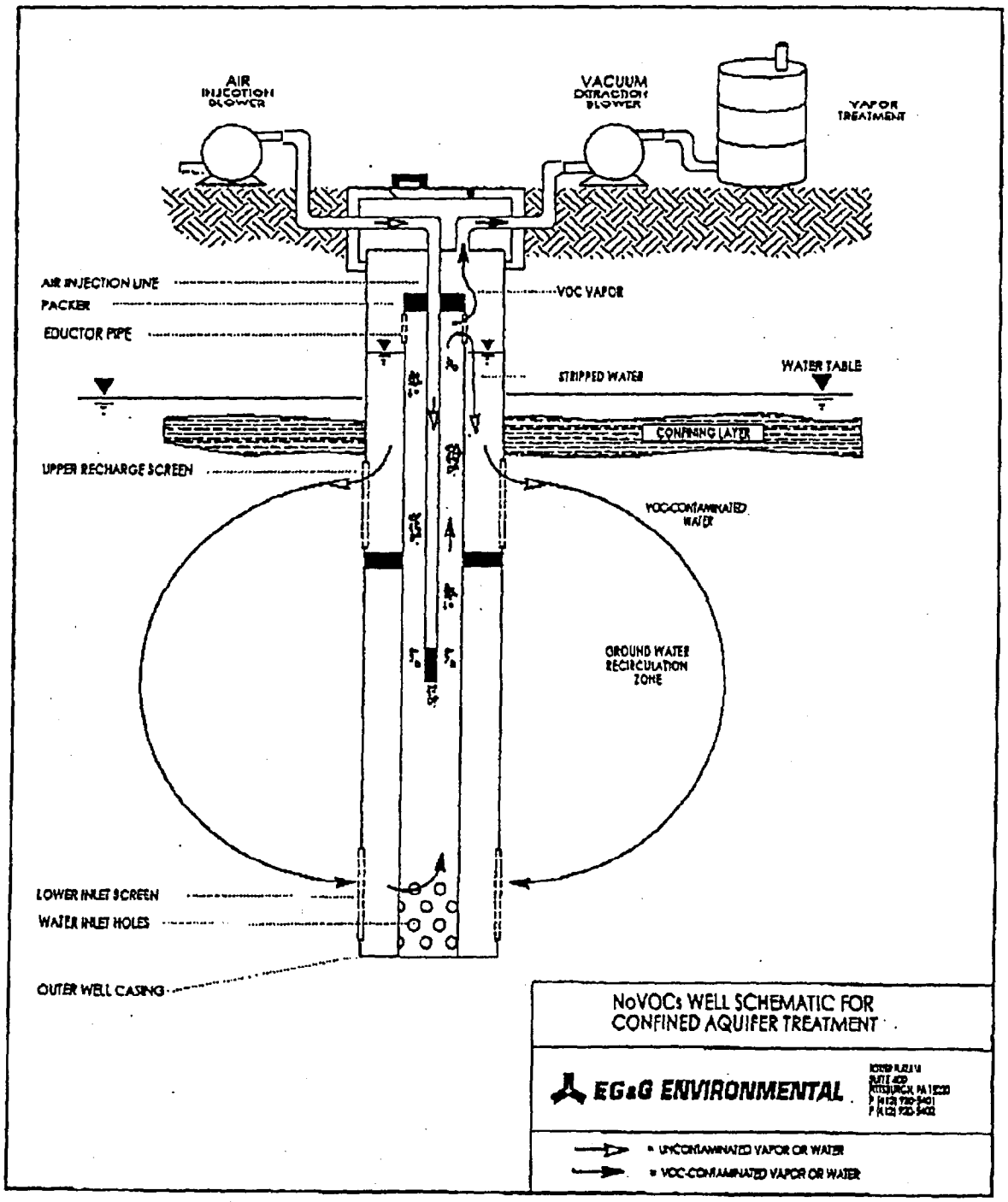

Figure 4 **Schematic of the MACTEC Confined Aquifer NoVOCs Groundwater Circulating Well System.**

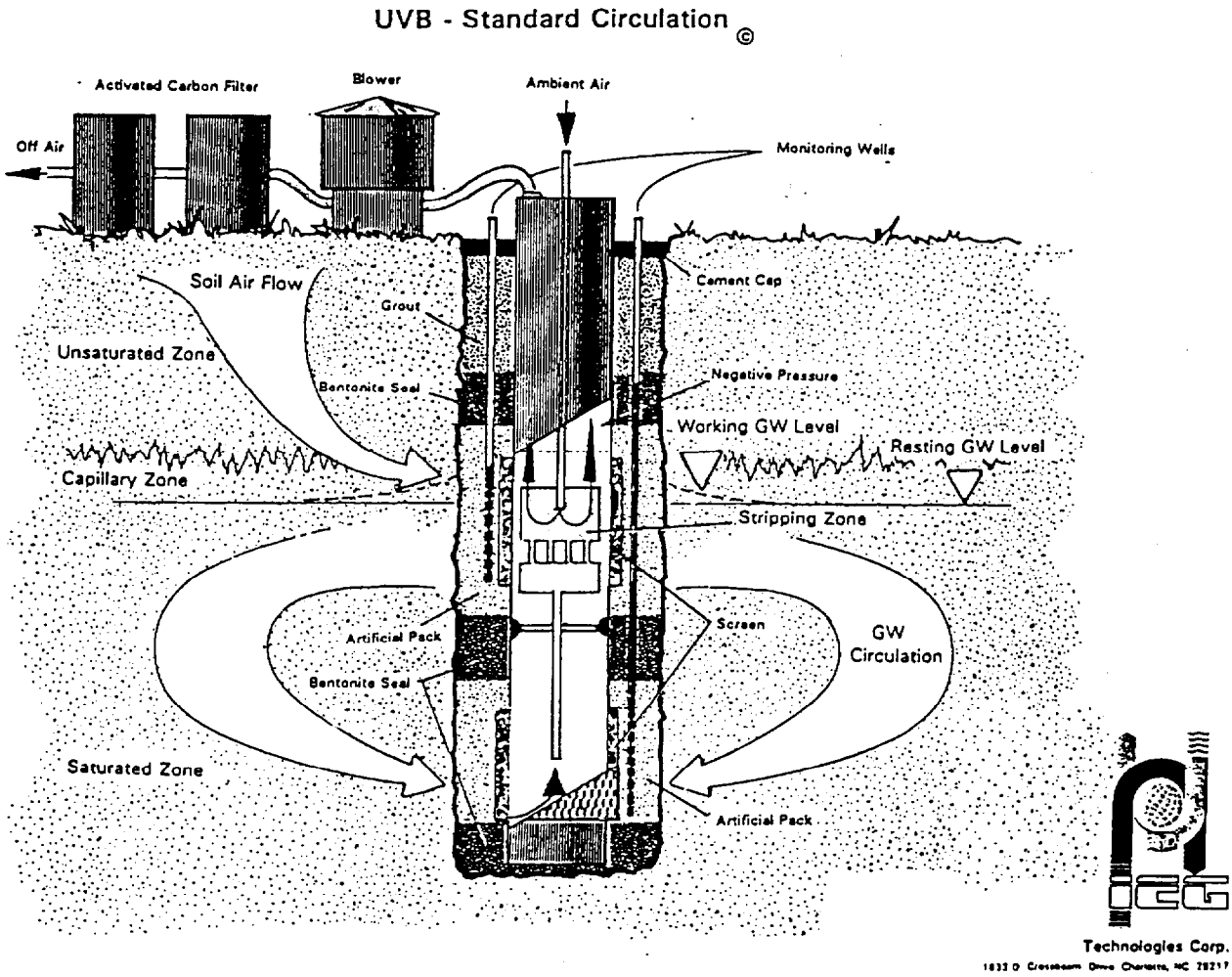

Figure 5 **Schematic of the IEG Technologies Standard Circulation UVB Groundwater Circulation Well System**

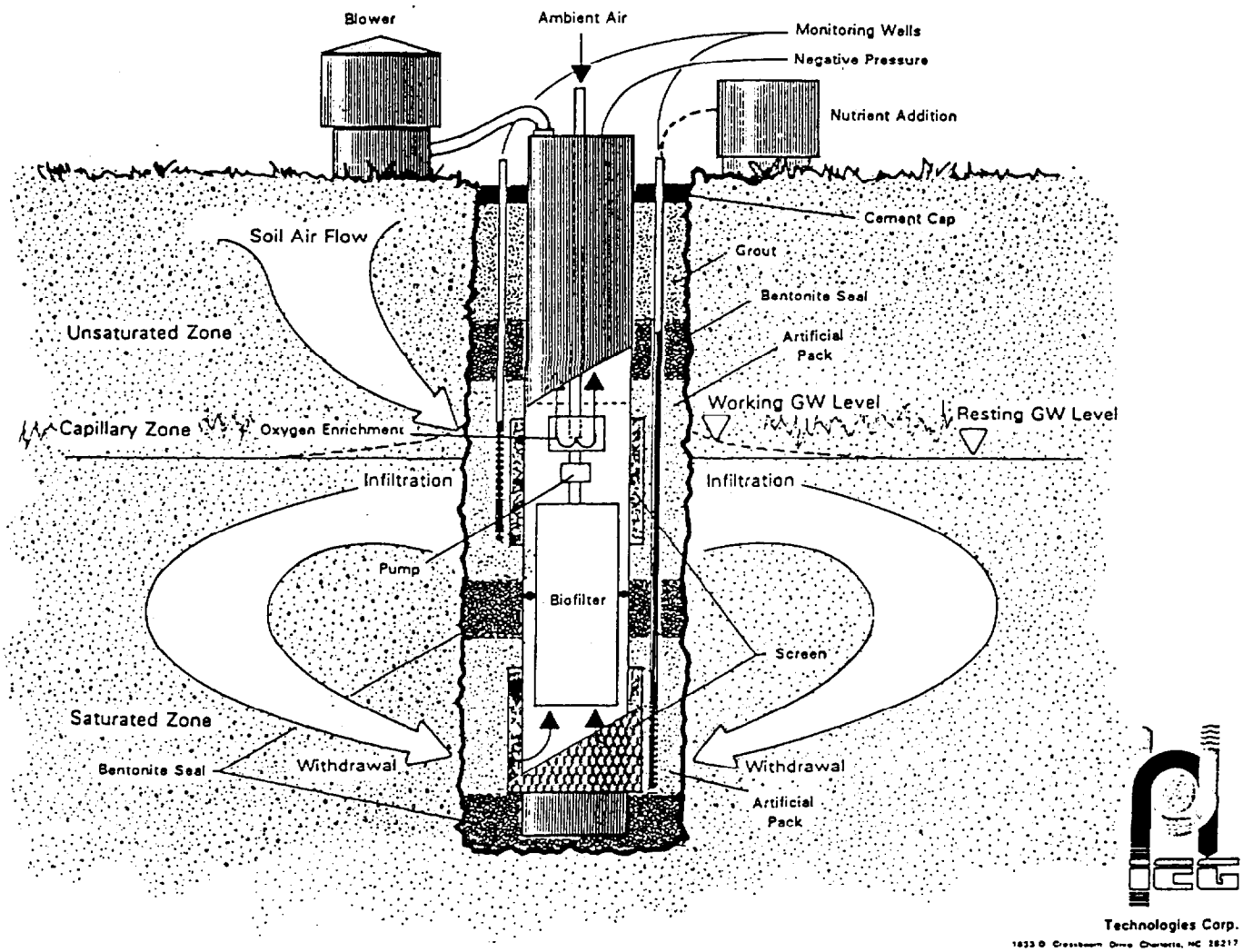

Figure 6 **Schematic of the IEG Technologies Biological Treatment Groundwater Circulating Well System**

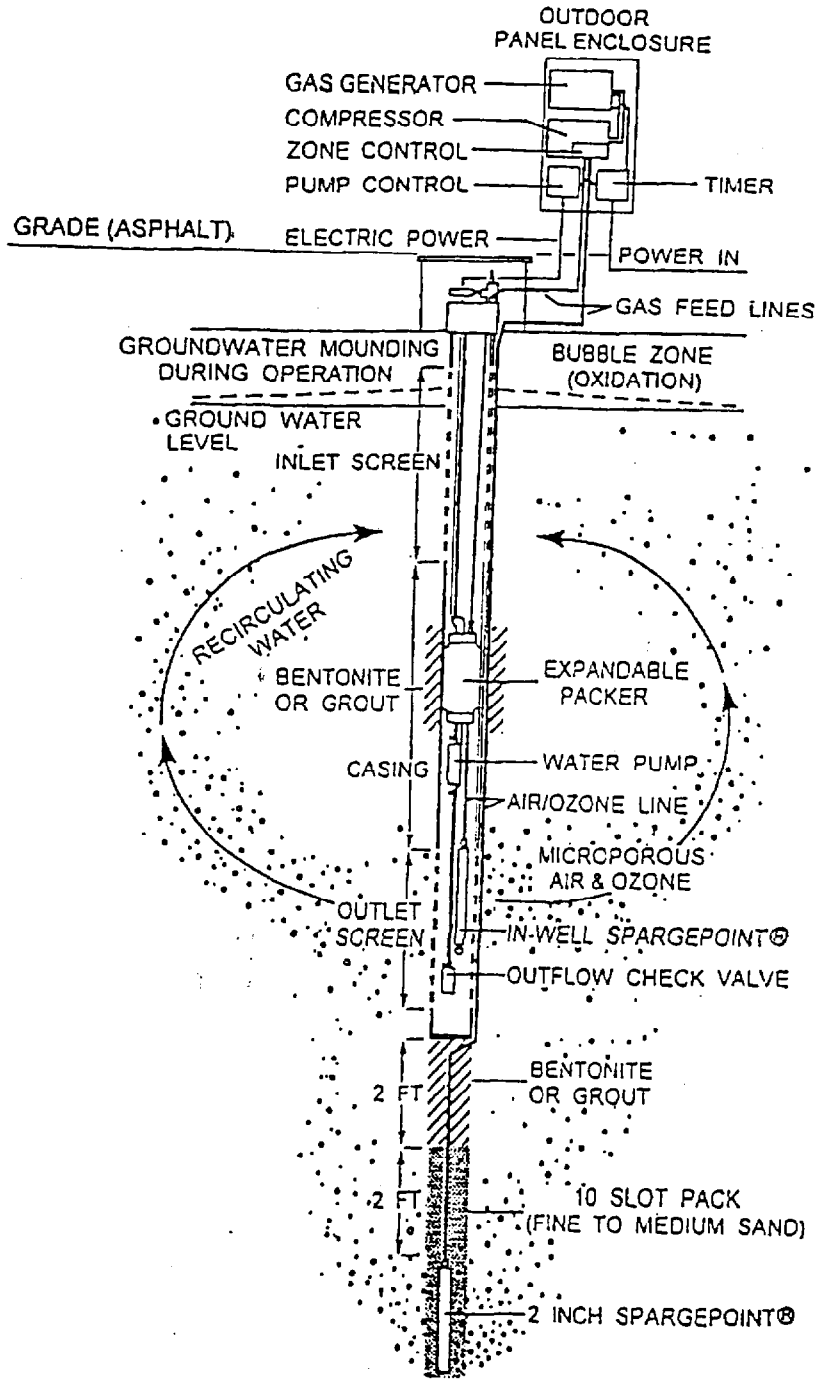

Figure 7 **Schematic of KV Associates C-Sparge Groundwater Circulating Well System**

4.0 DISCUSSION OF GCW LIMITATIONS

Notwithstanding the fact GCW systems have been installed at more than 100 sites throughout the U.S. and Europe and some successes documented, the technology currently is generally not considered in groundwater cleanup feasibility studies. This is in part due to the general lack of knowledge of GCW and in part due to its mixed results. Some would consider GCW to be immature technology at this point because of its limited success, others believe that it has had ample opportunity to mature and that it just doesn't work very well and/or does not generally realize benefits superior to traditional pump-and-treat approaches.

In this section, some of the basic factors that severely limit GCW's general applicability are discussed along with site screening recommendations. In addition to basic physical limitations to its applicability, efficacy monitoring problems that render GCW less attractive are also discussed.

4.1 RECIRCULATION

The principles upon which GCW is based are sound, the integration of the principles into the technology can be viewed as elegant, however, it is not broadly applicable as an effective groundwater remediation technology. GCW's sensitivity to the layered heterogeneity and anisotropy characteristic of most potential target aquifers will generally impede the development of an effective recirculation cell.

The heart of GCW technology, and what differentiates it from competing technologies is its ability to cause the vertical flow of groundwater and generate a 3-dimensional treatment spheroid. The induced vertical flow can better mobilize contaminants sorbed in finer grained layers than horizontal flow and it allows for the recirculation of groundwater through the well. The effects of aquifer anisotropy on GCW was not overlooked by its originators nor the vendors. Current "rule of thumb" guidelines are that GCW is most effective in aquifers with anisotropies of between 3 and 10 (Kh/Kv). For an anisotropy lower than 3, meaning the vertical hydraulic conductivity is not much lower than the horizontal, a GCW will short circuit and generally not achieve an ROI that allows a large enough treatment zone to be cost effective as compared to other technologies. An anisotropy over 10 causes too much of the discharged water to flow outside of the reach of the recirculation influence of the intake because of limited vertical flow and again an effective recirculating treatment zone is not generated. Figure 8 shows conceptual diagrams that depict: ideal conditions, short circuiting, and no circulation cases for these general anisotropy ranges.

The reason why GCW is not broadly applicable and will have limited efficacy at most sites is because most sites requiring groundwater remediation have layered inhomogeneities and have anisotropies greater than 10. In the field, it is not uncommon for layered heterogeneity to lead to anisotropy values on the order of 100:1 or even larger (Freeze and Cherry, 1979).

To demonstrate the significant effect that layered heterogeneities (stratification) has on anisotropy, consider an example of a 100-foot thick homogeneous and isotropic sand unit with hydraulic conductivity (K) = 10^{-2} cm/sec. Within the sand is a 1-foot thick clay with K=10^{-6} cm/sec. Using equations derived by Maasland (1957), it can be shown that the presence of the thin clay bed, while having insignificant effect on horizontal K, has the effect of decreasing vertical K by two orders of magnitude to 10^{-4} when considering the entire thickness. This example then has

an anisotropy of 100 which would render GCW ineffective because a meaningful recirculation zone could not be generated. As noted previously, such anisotropy due to stratigraphic layering is in addition to microscopic anisotropy associated with flat grains, so even the assumption of an isotropic sand unit is not realistic.

The most obvious requirement for proper implementation of the GCW technology then, is the need for a detailed hydrogeologic investigation that defines the conditions at the site in 3-dimensions. Conventional pump-and-treat technologies rely primarily on horizontal flow to the extraction wells or between extraction and injection well, whereas the effectiveness of GCW systems relies on the development of a circulation cell which relies on a vertical flow component and thin layers of less permeable strata can interfere with circulation and significantly decrease the effectiveness of GCW systems. Conventional aquifer testing during site characterization may not reveal these strata. In addition, conventional pump tests will not determine the vertical conductivity, a parameter that must be known for proper GCW design. It is imperative that both the vertical and horizontal hydraulic conductivity be determined both at the well and throughout the circulation cell. These data are needed for initial feasibility screening and subsequently for modeling the aquifer response to GCW operation to effectively place both the screen intervals and the multiple wells at any given site.

Estimation of horizontal and vertical hydraulic conductivities toward truly quantifying anisotropy is not a straightforward task in the context of evaluating the feasibility of GCW at a given site. In addition to aquifer test data and laboratory permeability testing data, the entire vertical section of the proposed target zone should be evaluated in detail. This requires examination of continuous cores from an array of boreholes throughout the anticipated ROI. After cross sections are developed and correlated to physical (geotechnical) test data, a detailed vertical model should be developed that characterizes all layered heterogeneities. Any laterally significant layer of finer materials, no matter how thin, detected in this process should be considered a potential fatal flaw to GCW implementation. Based on the vertical model, the total estimated vertical hydraulic conductivity should be calculated. If the then estimated anisotropy is between 3 and 10, the site may be a candidate for an effective GCW. Even a meticulously characterized site that is modeled within this range may not allow an effective recirculation zone to be developed because of the impedances to vertical flow caused by even very thin (to less than 1mm) layers of finer grained materials.

In summary, the first and foremost factor that should be examined when considering the feasibility of GCW at a particular site is the anisotropy based on a detailed study, because GCW can only be effective where vertical flow can be induced. Because of its severe sensitivity to stratification, GCW will not be effective at many contaminated groundwater sites.

4.2 PROVING RECIRCULATION

Proving that circulation/recirculation is occurring at a GCW has been shown in the case histories to be a difficult and imprecise task. Currently, this limitation seems a significant roadblock to acceptance and further demonstrations of GCW by prospective users and especially DoD. Proving that recirculation is occurring and verifying the dynamics and geometry of the induced treatment cell are of critical importance to GCW so that its efficacy and performance can be quantified and compared to competing technologies on a benefit versus cost basis. To date, this comparison has generally not been convincingly made.

The fundamental problem to proving recirculation is that the flows induced by GCW are quite subtle at appreciable distances away from the well and cannot presently be directly monitored with any general reliability or repeatability. Because of this, numerous indirect measurement techniques have been utilized with varying degrees of success. Direct and indirect monitoring techniques tried to date include:

- Dye tracer studies
- Water level changes
- Pressure changes (by transducers)
- Contaminant reduction charting
- Microbe counts
- DO increases
- Phosphorous or other nutrient changes
- Carbon isotope data
- Homogenation of electrical conductivity
- Flow sensors
- Bore-scope colloid tracking
- Mass balance calculations

Unfortunately, there is often disagreement in the results from these data. For example, at the March AFB demonstration, contaminant concentration charting suggested that water was being circulated to 90 feet in all directions around the well while the tracer data indicated that there was only flow in the downgradient direction. Head measurements, measured as water levels in piezometers or monitoring wells around the circulation cell, are difficult to use because the head changes induced by GCW operation diminish rapidly with increasing distance from the well. It becomes difficult to measure the small head changes because of interference by natural groundwater fluctuations.

Decreased contaminant concentrations throughout the circulation cell would seem a good indication of circulation; however, the data rarely shows an evenly distributed and uniform pattern of decreasing contaminant concentrations. GCWs are very effective at smearing contaminant and the concentrations at monitoring locations around many sites tend to fluctuate up and down with time. Superimposing these changes onto the background fluctuations in contaminant concentrations can make it difficult to verify circulation.

It often has been the case that contaminant concentrations at operating GCWs have shown the greatest decline close to the discharge screen, lesser declines or even increases away from the discharge both vertically and horizontally. Such a distribution would be expected at the early stages of operation as cleaner water from the air stripper replaces the original concentration water as it begins to circulate. However, this general concentration distribution has in some cases persisted many months into operation. Such observations have lead some GCW users to conclude that it is not effectively circulating and treating groundwater in the target zone but rather only diluting contaminant concentrations at, and radially out from the discharge. Such conclusions, right or wrong, highlight three important considerations. First, concentration charting may not provide a clear picture of the dynamics of the treatment cell. Second, the establishment of a zone of recirculation is never instantaneous and may take many months to fully develop. Finally, GCW systems may seem to be effectively reducing contaminant concentrations in shallow zones near the discharge but due to limited circulation may only be treating deeper waters near the intake and merely diluting or driving outward the original contaminant mass from the discharge.

It can be stated with some conviction, based on the presented case histories, that if monitoring wells and concentration tracking are to be heavily relied upon for GCW efficacy monitoring at a particular site, then an extensive array of vertically and horizontally distributed monitoring points is required. Locations appropriate for monitoring include shallow intermediate and deep points near the GCW well, near the anticipated point of stagnation (ROI) and one or more

points between. These arrays should be installed in the upgradient, downgradient and cross gradient directions.

Aside from monitoring wells used for contaminant concentration charting for purposes of indicating the dynamics of the recirculation zone and the efficacy of GCW, groundwater monitoring may also be placed outside the ROI of the system directly downgradient of the GCW well. Such downgradient monitoring will allow the overall effectiveness of the system to be gauged. If the downgradient water quality meets the objectives, then the GCW could be viewed as effective. However, as highlighted above, in order to make this conclusion groundwater from several depth and from cross gradient positions should be monitored to confirm that contaminant mass is being treated rather than just being redistributed.

Tracer tests provide the best evidence for groundwater circulation. The bromide tracer test at Tyndall AFB showed that circulation was occurring which concurred with the trends shown in the contaminant profiles. The tracer tests at Hill AFB showed that the GCW was not circulating groundwater. In both cases, tracer testing was effective at providing circulation data. In contrast, the results from the tracer test at March AFB conflicted with contaminant concentrations. Which method was more accurate was not clear, but it would be expected that if the changes in contaminant concentration were due to communication with the GCW that the tracer would have shown up at all locations, but this was not the case. What this does suggest is the need for a more reliable tracer approach. Dr. Richard Johnson from the Oregon Graduate Research Institute developed the tracer test approach that was used at Hill AFB . The test includes dual tracers and both a convergent and divergent approach that, in some cases, may allow the verification and measurement of groundwater circulation. A similar dual tracer test was planned for the Naval Air Station North Island demonstration but has not been conducted as of this writing. A detailed workplan for this study was prepared for USEPA Technology Innovation Office by Tetra Tech EM, Inc. (December 1997) that could serve as a resource to GCW users planning a dye tracer test.

Disadvantages to tracer tests are that they are relatively expensive to implement and in most situations would represent a single point in time and would not provide ongoing operation monitoring. It is, however, not unreasonable to believe that the costs will go down and the real time duration of tracer test will broaden if they continue to be employed for GCW monitoring to the point of becoming a standard practice.

In situ flow sensor and colloidal bore scope data are relatively direct groundwater flow direction and velocity measuring techniques that have been employed to aid defining ROIs and circulation dynamics for GCW. At Edwards AFB in situ flow sensors showed slight flow field changes as far as 35 to 50 feet crossgradient at a depth similar to the lower (intake) screen and colloidal borescope data has been used with some success at Naval Air Station North Island. Both of these techniques while very applicable to the task of directly measuring groundwater flow in 3-dimensions, lack the sensitivity to accurately measure the subtle flows induced away from the GCW. Advancements in the sensitivities of these technologies, especially in situ flow sensors would seem to be possible and would make such techniques more viable for efficacy monitoring of GCWs.

A variety of other chemical and biological measurements have been made at GCWs that indirectly support the identification of circulation dynamics. These measurements include: microbe counts, DO increases, phosphorous or other nutrient changes, carbon isotope data and homogenation of electrical conductivity. The biologic and nutrient measurements, which have been taken to gauge the increase of microbial activity resulting from the infusing of oxygen laden water

at the GCW discharge, seem generally limited by the relatively short distance DO will travel in the circulation zone before it is utilized as well as variability in other microbio-chemical processes. Monitoring for homogenation of electrical conductivity was employed at Port Hueneme (Spargo et al., 1996) for aiding in defining the ROI of a GCW with some success. Such approaches are elegant but require an original spatial discontinuity in physical or chemical parameters, presumably horizontal stratification in most cases, which must exist throughout the target zone to allow observations of homogenation. Discontinuities of a magnitude required for such approaches likely do not occur at most sites but if they do then homogenation monitoring should be considered as a potential aid in defining GCW ROI.

Finally, a mass balance approach can be used independently or to bolster other data in defining circulation dynamics of the treatment zone of a GCW. As brought out in the case history summaries given in Section 3, mass balance estimates are regularly used in GCW performance evaluation. Given enough chemical data, including treatment efficiencies within the GCW, original contaminant distribution, contaminant flux into and out of the ROI, mass removed by indingenous microbes and mass removed by GCW treatment, a treatment zone volume can be estimated which can be used to estimate the geometry of the treatment zone. Data that accurately estimate each of these parameters is, however, most often lacking, especially the flux and bioremediation parameters, and the mass balance renders questionable answers.

In summary recirculation, the heart of the GCW technology, is, based on the results of currently applied monitoring techniques, difficult to prove. The actual 3-dimensional treatment cell, or ROI geometries of GCW systems are not precisely known nor are they regularly estimated with much degree of confidence. And because this knowledge is crucial to understanding the dynamics of the system and hence gauge its efficacy, GCW has rarely been shown a convincing success. This has lead to a roadblock toward broad acceptance of GCW and forestalled endorsement by DoD.

Certainly a GCW user can take the view that if mass is being removed and if concentrations are reduced, then the system is working and proving its dynamics is of secondary concern. But in the end, and certainly most of the time for DoD sites, how well it works compared to other technologies must be quantified in order for GCW to even be considered for selection. Such feasibility studies cannot appropriately proceed absent an understanding of the GCW recirculation dynamics at a given site.

4.3 IN-WELL PROCESSES

Several in-well physical and chemical processes can limit the potential effectiveness of GCW that use air stripping for contaminant treatment. Two which have the greatest potential for limiting effectiveness are co-current stripping and geochemical effects are briefly discussed below.

Most GCW designs utilize air lift pumping to circulate groundwater up through the well and to induce circulation through the aquifer. The same air stream is often used for treatment by air stripping, resulting in co-current air stripping. Co-current flow means that the air and water are flowing in the same direction. Most aboveground air strippers use counter current flow, that is the air and water flow in opposite directions. Counter current flow stripping is much more efficient than co-current flow stripping and while some GCW designs incorporate it, it is more difficult to design and operate an effective in-well counter current flow stripper. As a result, the stripping efficiency of almost any down-hole stripper will be less than an above ground stripper. As seen in the case histories given in Section 3, VOC removal efficiencies for GCW co-current strippers

generally do not exceed 99% and most often range between 90% and 98%. What this means is that contaminant concentrations greater than one order of magnitude higher than the cleanup goal will likely not meet the cleanup goal in one pass through the GCW.

This built-in treatment inefficiency then generally necessitates multiple passes through the GCW to achieve the desired contaminant reductions, which fortunately is what GCWs are designed to do through recirculation. However, even in properly functioning GCW systems were an effective recirculation zone has been established, not all of the first pass concentrations will be recirculated and concentrations above the cleanup goal may migrate downgradient. While this shortcoming can be overcome by the installation of a second downgradient GCW (or row of GCWs) it is one of the factors that diminish GCW's utility as a plume interception or containment strategy.

A variety of geochemical effects can be caused by GCW systems that will adversely affect their effective use. While most of these negative effects can be mitigated and do not represent fatal flaws in most cases, the mitigation adds complexity and cost to O&M of the system.

The vertical pumping action of the well can affect the distribution of other chemical components (e.g. salts, carbon dioxide, metals). These changes may affect the geochemistry of the aquifer. Air stripping groundwater can also impact geochemistry. Subsurface environments frequently contain higher concentrations of carbon dioxide species (carbonates) than water in equilibrium with the atmosphere. Air stripping tends to reduce carbon dioxide concentrations in groundwater. The removal of carbon dioxide affects the buffering capacity of groundwater and may result in pH increases. Some of these impacts can be controlled by increasing the proportion of carbon dioxide in the air used to strip the VOCs from groundwater (used in closed loop systems). If carbon dioxide injection is impractical, the pH changes can be controlled by dosing the effluent with small concentrations of acid. Such chemistry controling features of course add complexity and cost to GCW systems.

Changes in pH and redox potential can affect the chemical balance in the subsurface. Changes in solubility are especially troublesome. Precipitation of iron and calcite are potential problems with GCW systems. The case histories given in Section 3, highlight some of these adverse precipitation effects. One of the most severe impacts was at Naval Air Station North Island where iron precipitation caused plugging of the recharge screen and recharge zone that has rendered the GCW inoperational for over 6 months and may well lead to abandonment of the demonstration there. Iron precipitate seems to have plugged off the discharge screen and adjacent sand pack to the degree that the discharge was forced up and out of the GCW in the initial stages of operation. Subsequent redevelopment has lead to some short lived improvement. Additionally, bacteria fouling inside the well has been a persistent problem and likely contributes to the diminished discharge capacity.

Where vadose zone infiltration galleries are utilized for GCW discharge, the water pumped into the infiltration zone may not be in equilibrium with the soil chemistry. This is particularly true in the desert southwest, where the soils are often sodic (high in sodium) and the aquifer water relatively low in sodium. When low-ionic-strength waters come in contact with sodic soils, sodium is displaced from the soil that, in turn, can both displace clay colloids and cause deflocculation, or swelling of the clays and result in clogging of the pore spaces (Brady 1974). Samples collected during GCW construction at Edwards Air Force Base (Gilmore et al., 1996) indicated the sodium percent in the soils was high, particularly in the zones near the surface, and the water from the pumping zone near the bottom of the aquifer had relative low-ionic strength. To control these

4.0 DISCUSSION OF GCW LIMITATIONS

Notwithstanding the fact GCW systems have been installed at more than 100 sites throughout the U.S. and Europe and some successes documented, the technology currently is generally not considered in groundwater cleanup feasibility studies. This is in part due to the general lack of knowledge of GCW and in part due to its mixed results. Some would consider GCW to be immature technology at this point because of its limited success, others believe that it has had ample opportunity to mature and that it just doesn't work very well and/or does not generally realize benefits superior to traditional pump-and-treat approaches.

In this section, some of the basic factors that severely limit GCW's general applicability are discussed along with site screening recommendations. In addition to basic physical limitations to its applicability, efficacy monitoring problems that render GCW less attractive are also discussed.

4.1 RECIRCULATION

The principles upon which GCW is based are sound, the integration of the principles into the technology can be viewed as elegant, however, it is not broadly applicable as an effective groundwater remediation technology. GCW's sensitivity to the layered heterogeneity and anisotropy characteristic of most potential target aquifers will generally impede the development of an effective recirculation cell.

The heart of GCW technology, and what differentiates it from competing technologies is its ability to cause the vertical flow of groundwater and generate a 3-dimensional treatment spheroid. The induced vertical flow can better mobilize contaminants sorbed in finer grained layers than horizontal flow and it allows for the recirculation of groundwater through the well. The effects of aquifer anisotropy on GCW was not overlooked by its originators nor the vendors. Current "rule of thumb" guidelines are that GCW is most effective in aquifers with anisotropies of between 3 and 10 (Kh/Kv). For an anisotropy lower than 3, meaning the vertical hydraulic conductivity is not much lower than the horizontal, a GCW will short circuit and generally not achieve an ROI that allows a large enough treatment zone to be cost effective as compared to other technologies. An anisotropy over 10 causes too much of the discharged water to flow outside of the reach of the recirculation influence of the intake because of limited vertical flow and again an effective recirculating treatment zone is not generated. Figure 8 shows conceptual diagrams that depict: ideal conditions, short circuiting, and no circulation cases for these general anisotropy ranges.

The reason why GCW is not broadly applicable and will have limited efficacy at most sites is because most sites requiring groundwater remediation have layered inhomogeneities and have anisotropies greater than 10. In the field, it is not uncommon for layered heterogeneity to lead to anisotropy values on the order of 100:1 or even larger (Freeze and Cherry, 1979).

To demonstrate the significant effect that layered heterogeneities (stratification) has on anisotropy, consider an example of a 100-foot thick homogeneous and isotropic sand unit with hydraulic conductivity (K) = 10^{-2} cm/sec. Within the sand is a 1-foot thick clay with K=10^{-6} cm/sec. Using equations derived by Maasland (1957), it can be shown that the presence of the thin clay bed, while having insignificant effect on horizontal K, has the effect of decreasing vertical K by two orders of magnitude to 10^{-4} when considering the entire thickness. This example then has

an anisotropy of 100 which would render GCW ineffective because a meaningful recirculation zone could not be generated. As noted previously, such anisotropy due to stratigraphic layering is in addition to microscopic anisotropy associated with flat grains, so even the assumption of an isotropic sand unit is not realistic.

The most obvious requirement for proper implementation of the GCW technology then, is the need for a detailed hydrogeologic investigation that defines the conditions at the site in 3-dimensions. Conventional pump-and-treat technologies rely primarily on horizontal flow to the extraction wells or between extraction and injection well, whereas the effectiveness of GCW systems relies on the development of a circulation cell which relies on a vertical flow component and thin layers of less permeable strata can interfere with circulation and significantly decrease the effectiveness of GCW systems. Conventional aquifer testing during site characterization may not reveal these strata. In addition, conventional pump tests will not determine the vertical conductivity, a parameter that must be known for proper GCW design. It is imperative that both the vertical and horizontal hydraulic conductivity be determined both at the well and throughout the circulation cell. These data are needed for initial feasibility screening and subsequently for modeling the aquifer response to GCW operation to effectively place both the screen intervals and the multiple wells at any given site.

Estimation of horizontal and vertical hydraulic conductivities toward truly quantifying anisotropy is not a straightforward task in the context of evaluating the feasibility of GCW at a given site. In addition to aquifer test data and laboratory permeability testing data, the entire vertical section of the proposed target zone should be evaluated in detail. This requires examination of continuous cores from an array of boreholes throughout the anticipated ROI. After cross sections are developed and correlated to physical (geotechnical) test data, a detailed vertical model should be developed that characterizes all layered heterogeneities. Any laterally significant layer of finer materials, no matter how thin, detected in this process should be considered a potential fatal flaw to GCW implementation. Based on the vertical model, the total estimated vertical hydraulic conductivity should be calculated. If the then estimated anisotropy is between 3 and 10, the site may be a candidate for an effective GCW. Even a meticulously characterized site that is modeled within this range may not allow an effective recirculation zone to be developed because of the impedances to vertical flow caused by even very thin (to less than 1mm) layers of finer grained materials.

In summary, the first and foremost factor that should be examined when considering the feasibility of GCW at a particular site is the anisotropy based on a detailed study, because GCW can only be effective where vertical flow can be induced. Because of its severe sensitivity to stratification, GCW will not be effective at many contaminated groundwater sites.

4.2 PROVING RECIRCULATION

Proving that circulation/recirculation is occurring at a GCW has been shown in the case histories to be a difficult and imprecise task. Currently, this limitation seems a significant roadblock to acceptance and further demonstrations of GCW by prospective users and especially DoD. Proving that recirculation is occurring and verifying the dynamics and geometry of the induced treatment cell are of critical importance to GCW so that its efficacy and performance can be quantified and compared to competing technologies on a benefit versus cost basis. To date, this comparison has generally not been convincingly made.

The fundamental problem to proving recirculation is that the flows induced by GCW are quite subtle at appreciable distances away from the well and cannot presently be directly monitored with any general reliability or repeatability. Because of this, numerous indirect measurement techniques have been utilized with varying degrees of success. Direct and indirect monitoring techniques tried to date include:

- Dye tracer studies
- Water level changes
- Pressure changes (by transducers)
- Contaminant reduction charting
- Microbe counts
- DO increases
- Phosphorous or other nutrient changes
- Carbon isotope data
- Homogenation of electrical conductivity
- Flow sensors
- Bore-scope colloid tracking
- Mass balance calculations

Unfortunately, there is often disagreement in the results from these data. For example, at the March AFB demonstration, contaminant concentration charting suggested that water was being circulated to 90 feet in all directions around the well while the tracer data indicated that there was only flow in the downgradient direction. Head measurements, measured as water levels in piezometers or monitoring wells around the circulation cell, are difficult to use because the head changes induced by GCW operation diminish rapidly with increasing distance from the well. It becomes difficult to measure the small head changes because of interference by natural groundwater fluctuations.

Decreased contaminant concentrations throughout the circulation cell would seem a good indication of circulation; however, the data rarely shows an evenly distributed and uniform pattern of decreasing contaminant concentrations. GCWs are very effective at smearing contaminant and the concentrations at monitoring locations around many sites tend to fluctuate up and down with time. Superimposing these changes onto the background fluctuations in contaminant concentrations can make it difficult to verify circulation.

It often has been the case that contaminant concentrations at operating GCWs have shown the greatest decline close to the discharge screen, lesser declines or even increases away from the discharge both vertically and horizontally. Such a distribution would be expected at the early stages of operation as cleaner water from the air stripper replaces the original concentration water as it begins to circulate. However, this general concentration distribution has in some cases persisted many months into operation. Such observations have lead some GCW users to conclude that it is not effectively circulating and treating groundwater in the target zone but rather only diluting contaminant concentrations at, and radially out from the discharge. Such conclusions, right or wrong, highlight three important considerations. First, concentration charting may not provide a clear picture of the dynamics of the treatment cell. Second, the establishment of a zone of recirculation is never instantaneous and may take many months to fully develop. Finally, GCW systems may seem to be effectively reducing contaminant concentrations in shallow zones near the discharge but due to limited circulation may only be treating deeper waters near the intake and merely diluting or driving outward the original contaminant mass from the discharge.

It can be stated with some conviction, based on the presented case histories, that if monitoring wells and concentration tracking are to be heavily relied upon for GCW efficacy monitoring at a particular site, then an extensive array of vertically and horizontally distributed monitoring points is required. Locations appropriate for monitoring include shallow intermediate and deep points near the GCW well, near the anticipated point of stagnation (ROI) and one or more

points between. These arrays should be installed in the upgradient, downgradient and cross gradient directions.

Aside from monitoring wells used for contaminant concentration charting for purposes of indicating the dynamics of the recirculation zone and the efficacy of GCW, groundwater monitoring may also be placed outside the ROI of the system directly downgradient of the GCW well. Such downgradient monitoring will allow the overall effectiveness of the system to be gauged. If the downgradient water quality meets the objectives, then the GCW could be viewed as effective. However, as highlighted above, in order to make this conclusion groundwater from several depth and from cross gradient positions should be monitored to confirm that contaminant mass is being treated rather than just being redistributed.

Tracer tests provide the best evidence for groundwater circulation. The bromide tracer test at Tyndall AFB showed that circulation was occurring which concurred with the trends shown in the contaminant profiles. The tracer tests at Hill AFB showed that the GCW was not circulating groundwater. In both cases, tracer testing was effective at providing circulation data. In contrast, the results from the tracer test at March AFB conflicted with contaminant concentrations. Which method was more accurate was not clear, but it would be expected that if the changes in contaminant concentration were due to communication with the GCW that the tracer would have shown up at all locations, but this was not the case. What this does suggest is the need for a more reliable tracer approach. Dr. Richard Johnson from the Oregon Graduate Research Institute developed the tracer test approach that was used at Hill AFB . The test includes dual tracers and both a convergent and divergent approach that, in some cases, may allow the verification and measurement of groundwater circulation. A similar dual tracer test was planned for the Naval Air Station North Island demonstration but has not been conducted as of this writing. A detailed workplan for this study was prepared for USEPA Technology Innovation Office by Tetra Tech EM, Inc. (December 1997) that could serve as a resource to GCW users planning a dye tracer test.

Disadvantages to tracer tests are that they are relatively expensive to implement and in most situations would represent a single point in time and would not provide ongoing operation monitoring. It is, however, not unreasonable to believe that the costs will go down and the real time duration of tracer test will broaden if they continue to be employed for GCW monitoring to the point of becoming a standard practice.

In situ flow sensor and colloidal bore scope data are relatively direct groundwater flow direction and velocity measuring techniques that have been employed to aid defining ROIs and circulation dynamics for GCW. At Edwards AFB in situ flow sensors showed slight flow field changes as far as 35 to 50 feet crossgradient at a depth similar to the lower (intake) screen and colloidal borescope data has been used with some success at Naval Air Station North Island. Both of these techniques while very applicable to the task of directly measuring groundwater flow in 3-dimensions, lack the sensitivity to accurately measure the subtle flows induced away from the GCW. Advancements in the sensitivities of these technologies, especially in situ flow sensors would seem to be possible and would make such techniques more viable for efficacy monitoring of GCWs.

A variety of other chemical and biological measurements have been made at GCWs that indirectly support the identification of circulation dynamics. These measurements include: microbe counts, DO increases, phosphorous or other nutrient changes, carbon isotope data and homogenation of electrical conductivity. The biologic and nutrient measurements, which have been taken to gauge the increase of microbial activity resulting from the infusing of oxygen laden water

at the GCW discharge, seem generally limited by the relatively short distance DO will travel in the circulation zone before it is utilized as well as variability in other microbio-chemical processes. Monitoring for homogenation of electrical conductivity was employed at Port Hueneme (Spargo et al., 1996) for aiding in defining the ROI of a GCW with some success. Such approaches are elegant but require an original spatial discontinuity in physical or chemical parameters, presumably horizontal stratification in most cases, which must exist throughout the target zone to allow observations of homogenation. Discontinuities of a magnitude required for such approaches likely do not occur at most sites but if they do then homogenation monitoring should be considered as a potential aid in defining GCW ROI.

Finally, a mass balance approach can be used independently or to bolster other data in defining circulation dynamics of the treatment zone of a GCW. As brought out in the case history summaries given in Section 3, mass balance estimates are regularly used in GCW performance evaluation. Given enough chemical data, including treatment efficiencies within the GCW, original contaminant distribution, contaminant flux into and out of the ROI, mass removed by indingenous microbes and mass removed by GCW treatment, a treatment zone volume can be estimated which can be used to estimate the geometry of the treatment zone. Data that accurately estimate each of these parameters is, however, most often lacking, especially the flux and bioremediation parameters, and the mass balance renders questionable answers.

In summary recirculation, the heart of the GCW technology, is, based on the results of currently applied monitoring techniques, difficult to prove. The actual 3-dimensional treatment cell, or ROI geometries of GCW systems are not precisely known nor are they regularly estimated with much degree of confidence. And because this knowledge is crucial to understanding the dynamics of the system and hence gauge its efficacy, GCW has rarely been shown a convincing success. This has lead to a roadblock toward broad acceptance of GCW and forestalled endorsement by DoD.

Certainly a GCW user can take the view that if mass is being removed and if concentrations are reduced, then the system is working and proving its dynamics is of secondary concern. But in the end, and certainly most of the time for DoD sites, how well it works compared to other technologies must be quantified in order for GCW to even be considered for selection. Such feasibility studies cannot appropriately proceed absent an understanding of the GCW recirculation dynamics at a given site.

4.3 IN-WELL PROCESSES

Several in-well physical and chemical processes can limit the potential effectiveness of GCW that use air stripping for contaminant treatment. Two which have the greatest potential for limiting effectiveness are co-current stripping and geochemical effects are briefly discussed below.

Most GCW designs utilize air lift pumping to circulate groundwater up through the well and to induce circulation through the aquifer. The same air stream is often used for treatment by air stripping, resulting in co-current air stripping. Co-current flow means that the air and water are flowing in the same direction. Most aboveground air strippers use counter current flow, that is the air and water flow in opposite directions. Counter current flow stripping is much more efficient than co-current flow stripping and while some GCW designs incorporate it, it is more difficult to design and operate an effective in-well counter current flow stripper. As a result, the stripping efficiency of almost any down-hole stripper will be less than an above ground stripper. As seen in the case histories given in Section 3, VOC removal efficiencies for GCW co-current strippers

generally do not exceed 99% and most often range between 90% and 98%. What this means is that contaminant concentrations greater than one order of magnitude higher than the cleanup goal will likely not meet the cleanup goal in one pass through the GCW.

This built-in treatment inefficiency then generally necessitates multiple passes through the GCW to achieve the desired contaminant reductions, which fortunately is what GCWs are designed to do through recirculation. However, even in properly functioning GCW systems were an effective recirculation zone has been established, not all of the first pass concentrations will be recirculated and concentrations above the cleanup goal may migrate downgradient. While this shortcoming can be overcome by the installation of a second downgradient GCW (or row of GCWs) it is one of the factors that diminish GCW's utility as a plume interception or containment strategy.

A variety of geochemical effects can be caused by GCW systems that will adversely affect their effective use. While most of these negative effects can be mitigated and do not represent fatal flaws in most cases, the mitigation adds complexity and cost to O&M of the system.

The vertical pumping action of the well can affect the distribution of other chemical components (e.g. salts, carbon dioxide, metals). These changes may affect the geochemistry of the aquifer. Air stripping groundwater can also impact geochemistry. Subsurface environments frequently contain higher concentrations of carbon dioxide species (carbonates) than water in equilibrium with the atmosphere. Air stripping tends to reduce carbon dioxide concentrations in groundwater. The removal of carbon dioxide affects the buffering capacity of groundwater and may result in pH increases. Some of these impacts can be controlled by increasing the proportion of carbon dioxide in the air used to strip the VOCs from groundwater (used in closed loop systems). If carbon dioxide injection is impractical, the pH changes can be controlled by dosing the effluent with small concentrations of acid. Such chemistry controling features of course add complexity and cost to GCW systems.

Changes in pH and redox potential can affect the chemical balance in the subsurface. Changes in solubility are especially troublesome. Precipitation of iron and calcite are potential problems with GCW systems. The case histories given in Section 3, highlight some of these adverse precipitation effects. One of the most severe impacts was at Naval Air Station North Island where iron precipitation caused plugging of the recharge screen and recharge zone that has rendered the GCW inoperational for over 6 months and may well lead to abandonment of the demonstration there. Iron precipitate seems to have plugged off the discharge screen and adjacent sand pack to the degree that the discharge was forced up and out of the GCW in the initial stages of operation. Subsequent redevelopment has lead to some short lived improvement. Additionally, bacteria fouling inside the well has been a persistent problem and likely contributes to the diminished discharge capacity.

Where vadose zone infiltration galleries are utilized for GCW discharge, the water pumped into the infiltration zone may not be in equilibrium with the soil chemistry. This is particularly true in the desert southwest, where the soils are often sodic (high in sodium) and the aquifer water relatively low in sodium. When low-ionic-strength waters come in contact with sodic soils, sodium is displaced from the soil that, in turn, can both displace clay colloids and cause deflocculation, or swelling of the clays and result in clogging of the pore spaces (Brady 1974). Samples collected during GCW construction at Edwards Air Force Base (Gilmore et al., 1996) indicated the sodium percent in the soils was high, particularly in the zones near the surface, and the water from the pumping zone near the bottom of the aquifer had relative low-ionic strength. To control these

"dispersive" clays, calcium was added to the water in the form of calcium chloride. The calcium will substitute for the sodium on the clay and minimize flocculation and dispersal of the clays. In California, the agricultural community uses these methods to increase water penetration from irrigation (Oster et al. 1992).

The discharge of reinfiltration of a GCW is very often its flow rate limiting factor. This was clearly the case at Edwards AFB and at Naval Air Station North Island where direct aquifer recharge and vadose zone reinfiltration rates were observed to diminish because of geochemical effects respectively. Because such capacity losses negatively affect GCW performance by limiting flow rates, it is important to consider this potential seriously during technology screening and subsequent design steps. In addition to the consideration of screen and formation plugging, recharge zone hydraulic characteristics should also be evaluated. At North Island for instance, a reinjection test was performed to accurately assess recharge capacity. Oversizing the recharge area is a good way to mitigate against recharge capacity becoming the limiting factor of a GCW. For vadose zone applications, this would entail a larger infiltration gallery and for direct recharge it mean a longer screened interval. Large screened intervals, however, can limit the effectiveness of circulation zones in that they can increase the potential of short circuiting.

Lessons learned from years of pump-and-treat projects, however, indicate that regardless of chemical regimens and physical and chemical redevelopment activities, eventually recharge wells become irreparably plugged and need to be replaced. Similarly, GCWs will eventually succumb to this ailment, requiring replacement of the entire GCW at a new location. Moreover, metal oxides or other fouling agents, which might easily be removed above ground in pump-and-treat systems, would generally not be removed in most GCW systems, potentially leading to more severe fouling issues than a comparable reinjection well. In source or hot spot removal applications, this problem will likely not become an issue due to the relatively short duration of GCW operation, for containment or plume interception applications, however, well replacement due to loss of recharge capacity becomes a real and potentially costly reality.

5.0 TECHNOLOGY ASSESSMENT

This section summarizes the foregoing material in a brief assessment of the GCW technology. Advantages and disadvantages of GCW are highlighted and currently reasonable application limits are defined. Areas of potential further research that could aid in broadening GCW application are also discussed.

5.1 ADVANTAGES AND DISADVANTAGES

ADVANTAGES

In situ Treatment – GCW has the advantage of being an in situ method. GCW can continuously remove VOCs from groundwater without pumping the water to the surface or removing the water from the ground. Therefore, there is no need for an aboveground air-stripper or storage tanks to contain the treated water prior to disposal or reinjection. Since the groundwater never leaves the subsurface, there is no need for surface level infiltration galleries or reinjection wells. This minimizes the above ground space requirements of the system.

Vertical Flushing – GCW has the potential to accelerate aquifer restoration by flushing source contaminants. It may achieve this by enhancing vertical flow through a stratified system where high concentrations of contaminants are bound in lower permeability layers. This vertical groundwater flow may help mobilize contaminants from source areas and facilitate treatment.

No Reinjection – Since the groundwater never leaves the subsurface, it is not technically being reinjected into the subsurface. Therefore, it is not necessary to obtain a reinjection permit.

Low Impact on Groundwater Levels – The vertical geometry of the extraction and recharge points in a GCW system generally has minimal impacts on groundwater levels. Thus, it may be compatible with use in areas that are sensitive to groundwater levels such as wetlands, perennial springs and sole source aquifers. As stated, however, most GCW designs require at least several feet of vadose zone for effective operation.

Less Above Ground Treatment – Many sites have aquifers where the groundwater is contaminated with VOCs. Using In-Well Vapor Stripping, the VOCs are removed from the aquifer without removing groundwater. The system converts a groundwater contamination problem into a vapor stream, which can be treated at the surface. Like soil vapor extraction and groundwater extraction technologies, the process waste from this technology depends on the technology used to treat the VOC laden off-gas. Granular activated carbon (GAC) is commonly used to remove VOCs from air streams.

Biodegradation Enhancement – For VOCs that are amenable to aerobic degradation (e.g., BTEX), GCW potentially enhances biodegradation in two ways. First, the stripping process reduces the concentration of VOCs in the water thereby reducing toxic effects. Secondly, air becomes entrained in the water and oxygen thereby dissolves in the water as it passes through the in-well stripper. Therefore, the water discharged to the aquifer at the recharge well may have higher dissolved oxygen levels than surrounding groundwater. These higher dissolved oxygen levels can stimulate aerobic biodegradation. Also, the system can be used as a nutrient delivery platform for further enhancement of biodegradation.

Platform for Other Treatment Technologies – This technology can be used in conjunction with other groundwater remediation technologies. For example, the recirculation cell can be used to distribute chemicals used in groundwater remediation techniques, such as surfactants and catalysts. It can also be used to distribute nutrients or election acceptors for bioremediation projects.

DISADVANTAGES

Hydrogeologic Sensitivity – GCW cannot induce vertical flow and have effective circulating zones at sites where anisotropies are high (vertical hydraulic conductivities exceed horizontal hydraulic conductivities by more than a factor of 10). Such high anisotropies are quite common and impede the vertical groundwater flow component necessary to generate an effective recirculation cell and treatment zone.

Contaminant Mobility – If wells are not properly designed, it is possible to spread a partially remediated (lower concentration) plume by inducing the flow of partially treated water beyond the radius of influence of the well. Discharges to the vadose zone may also mobilize pockets of contaminant in the vadose zone, adding to the total mass of contaminants in the aquifer. However, if the well is properly designed, then these contaminants can be captured by the in situ VOC removal well. If the contamination zone is initially smaller than the recirculation zone of the GCW, then the recirculating well will spread contamination to previously uncontaminated zones. Therefore it is important to scale the GCW appropriately.

Treatment Efficiency – Depending upon the volatility of the contaminants and the physical design of the GCW system, the groundwater may need to pass through the well numerous times before treatment objectives can be achieved. It may be difficult to ensure that groundwater will meet treatment objectives when co-current in-well stripping is the only remedial technique being applied.

Geochemical Effects – The vertical pumping action of the well can affect the distribution of other chemical components (e.g. salts, carbon dioxide, metals). These changes may affect the geochemistry of the aquifer. Air stripping groundwater generally impacts geochemistry. Subsurface environments frequently contain higher concentrations of carbon dioxide than water in equilibrium with the atmosphere. Air stripping tends to reduce carbon dioxide concentrations in groundwater. The removal of carbon dioxide affects the buffering capacity of groundwater and may result in pH increases. Changes in pH and redox potential can affect the chemical balance in the subsurface and cause precipitation of iron and calcite. These precipitates plug the GCW recharge zone and limit flow performance.

Well Design – It is very important that GCWs are properly designed and carefully constructed. Because of the vertical orientation of the extraction and recharge well screens, it is possible for the system to short circuit if recharge water finds an easy flow path along the well bore to the extraction screen. Short circuiting can also occur if internal packers are utilized and they do not seal properly. In addition slot size, screen length and placement have been shown to be critical design elements in many applications.

Thin Target Zones – GCW is not cost effective for thin target zones. The maximum effective ROI of a GCW is 2 to 3 times the distance between the extraction zone and the reinjection zone. Thus, if a target zone is only 5 feet thick, then the diameter of the treatment zone would

probably be 20 to 30 feet, and too many wells might be necessary for the technology to be cost effective in many cases.

Nonvolatiles – GCW will not remove non-volatile compounds from the subsurface environment when the treatment is in-well air stripping. The in-well stripping process relies on the same chemical-physical principles as above ground air strippers. Thus the effectiveness of the technology is directly related to the volatility of the contaminants. Contaminants with higher Henry's Law constants are easier to remove.

5.2 LIMITED APPLICATION

While the principles comprising GCW are sound and their integration elegant, the technology will likely never be broadly applicable for groundwater remediation. GCW's narrow applicability is fundamentally linked to the heart of the technology, which is the inducement of vertical groundwater flow within the target zone and hence, the development of a circulation zone or cell. The hydrogeologic fabric of most sites where contaminants occur will generally impede vertical flow due to significantly lower hydraulic conductivities in the vertical direction than the horizontal, or high anisotropy. While the hydraulic head differences that drive the circulation may be able to overcome these stratified impedances in the aquifer very near to the GCW, its efficacy in this regard diminishes substantially away from the GCW.

The operational range for GCW is generally stated to be between anisotropies of 3 and 10 and this may well be the case. Vertical hydraulic conductivities, however, are difficult to measure or accurately model and are commonly overestimated. This is because the commutative effect of thin layers of finer grained materials is usually not well accounted for. As shown by example in Section 4, such stratification (or micro stratification) generally cause true anisotropies of well over 10. Because of this GCW will generally not generate a treatment zone large enough to be cost-effective when compared to other technologies at most sites.

That being said, an important potential niche application for GCW then maybe as a non-aqueous phase liquid (NAPL) source area or hot spot remediation tool. NAPLs and other concentrated contaminant phases often sorb to finer grained layers or lenses in aquifers. Such sorbed contaminants can be recalcitrant to treatment by standard pump-and-treat approaches in that they rely upon horizontal groundwater flow to transport contaminants to the extraction well. If sufficient vertical flow can be generated by a GCW through these zones and a circulation cell is developed, then these otherwise recalcitrant contaminants may be more easily transported and treated. The 3-dimensional zone where these beneficial vertical flushing occurs may be relatively small but could play a key role in effective overall cleanup strategy.

Another potential niche application that might beneficially be filled by GCW is the treatment of deep groundwater zones. Notwithstanding all of its limitations, GCW may provide the best cost verses benefit ratio for some sites. The most obvious of these is the cost savings of GCW when compared to pump-and-treat for deep aquifer remediation. At depths deeper than 200 to 300 feet, the electrical costs associated with pumping groundwater to the surface for treatment begin to become prohibitive. GCW, which has limited depth dependent, operational cost considerations might be a better alternative at some of these deep sites even if its circulation cell is fairly small. Obviously a detailed cost comparison would need to be performed to justify such a selection because compressor driven air lift pumping is itself a fairly inefficient process.

A potential niche that departs somewhat from the primary treatment methods of GCW is its use as a platform for the delivery of nutrients to stimulate biodegradation of contaminants. Even if vertical flow is limited and an effective circulation cell is not developed, the flow induced by GCW can deliver nutrients to microbes beneficially. The effectiveness of using GCW in this manner would derive from aquifer water being used to deliver the nutrients and the relatively rapid disbursement of concentrated nutrients over significant horizontal, and if anisotropy permits, vertical zones. Some recent researchers have used GCW pairs as a nutrient delivery platform with some success. Similarly, GCW could be used to deliver surfactants or catalysts.

In summary, because of its sensitivity to vertical flow impeding stratifications, GCW will generally not be effective at many, or even most sites as compared on a benefit versus cost basis to competing technologies. Notwithstanding this significant and fundamental limitation, GCWs can be beneficially used in several important niches areas including source removal, deep aquifer cleanup and microbe nutrient delivery.

5.3 RESEARCH AREAS

In spite the serious limitations to the broad applicability of GCW, it remains an emerging innovative technology that will find beneficial and cost-effective implementation at some sites. Continued study and demonstration of GCW then should proceed, although perhaps in a more focused manner. Data should be collected that allow better quantification of GCW's limitations so that its consideration in feasibility studies can be streamlined and so that its niche applications are also better quantified. Below, several general ideas and specific study areas are suggested that could aid in bringing GCW to maturity and more clearly identifying its role in site remediation.

It goes without saying that GCW demonstrations or pilot studies should only be contemplated at sites where the technology has a high likelihood of success. Given the discussion in Section 4, it seems reasonable to focus future demonstrations on sites that represent the highlighted niches and are suited to GCW hydrogeologically and geochemically. This approach should increase the odds for success as well as potentially provide for the remediation of a contaminant zone not otherwise cost-effectively remediated. Toward a clearer understanding of GCW flow dynamics and a more quantitative assessment of its circulation cell inducing limitations, demonstrations should spend a generous portion of their monitoring budgets on flow monitoring. For example, it might be reasonable to cut back on the frequency of contaminant concentration monitoring in monitoring wells, which may give spurious results, and apply those savings toward robust array of in situ flow sensors or a well planned dual tracer test or both. Such data would bolster the current paucity of data regarding GCW flow dynamics, which is at the heart of understanding this technology and its utility. The goal of such monitoring would be to gain insights into not just the ROI but also the uniformity of flow distribution and the amount of vertical flow.

As discussed previously, numerous direct and indirect methods have been employed in efforts to acquire these desired dynamics measurements. None have been unilaterally successful, dual dye tracer studies, however, seem to represent the state-of-the-art in this regard. Outside of the actual limitations of GCW, the lack of a trustworthy monitoring approach regarding the geometry and dynamics of the circulation well represent the largest hurdle to DoD acceptance of GCW. It therefore would be reasonable to further the development of some of the more promising methods. Dye tracer tests, for example, could be made more cost effective by perfecting their use through applied experience and by relying upon field dye detection techniques rather than laboratory methods. The sensitivity ranges of available pressure transducers an in situ flow sensors do not

allow them to detect the more subtle flows and head differences out near the ROI of GCWs. A technologic advancement lowering the sensitivity of these two direct reading instruments, especially the flow sensors would aid in monitoring GCW dynamics.

Further utilization and study of indirect zone of influence monitoring techniques such as homogenation of electrical conductivity and various biologic monitoring methods would also aid in the maturation and acceptance of GCW. To the degree possible, one or more of these indirect monitoring methods should be included in GCW demonstrations in order to augment direct observations and to further the state of knowledge of these methods. Research into such indirect monitoring methods seems warranted in that they may represent cost effective methods to monitor the geometry of the circulation zone.

Several in-well and above ground treatment monitoring and process aspects could be studied and improved toward maturing GCW. One such monitoring aspect is the need for accurately measuring the concentration of contaminants in groundwater that has just entered the GCW, another is a dependable method for measuring the water flow rate up through the GCW. The technology vendors are believed to be working on both of these issues as of this writing.

Another thing that could be done to expedite the maturation of GCW is to improve the ability to accurately account for the mass balance of the system. This will be aided by several of the reinforcements noted above as well as the use of an off-gas treatment technique amenable to total mass removal measurements. For example, condensers and/or GAC beds could, whether otherwise desirable or not, be utilized and monitored for total mass removal. Such mass removal measurements when combined with operation data, initial target zone mass estimates and natural gradient data will allow better estimates of system performance.

The study of multiple well GCW networks would also further the technology. Most of the pilot studies and demonstrations studied by DoD have been limited to one GCW. This is understandable in consideration of the costs associated with such studies, however, the potential positive synergistic effects of adjacent GCWs should be explored. For example, multiple rows of GCW could aid in the development of effective individual treatment wells by acting as hydraulic barriers to horizontal flow. This significant change in system dynamics could cause vertical flow and recirculation at greater distances away from the GCWs than achievable with isolated GCWs.

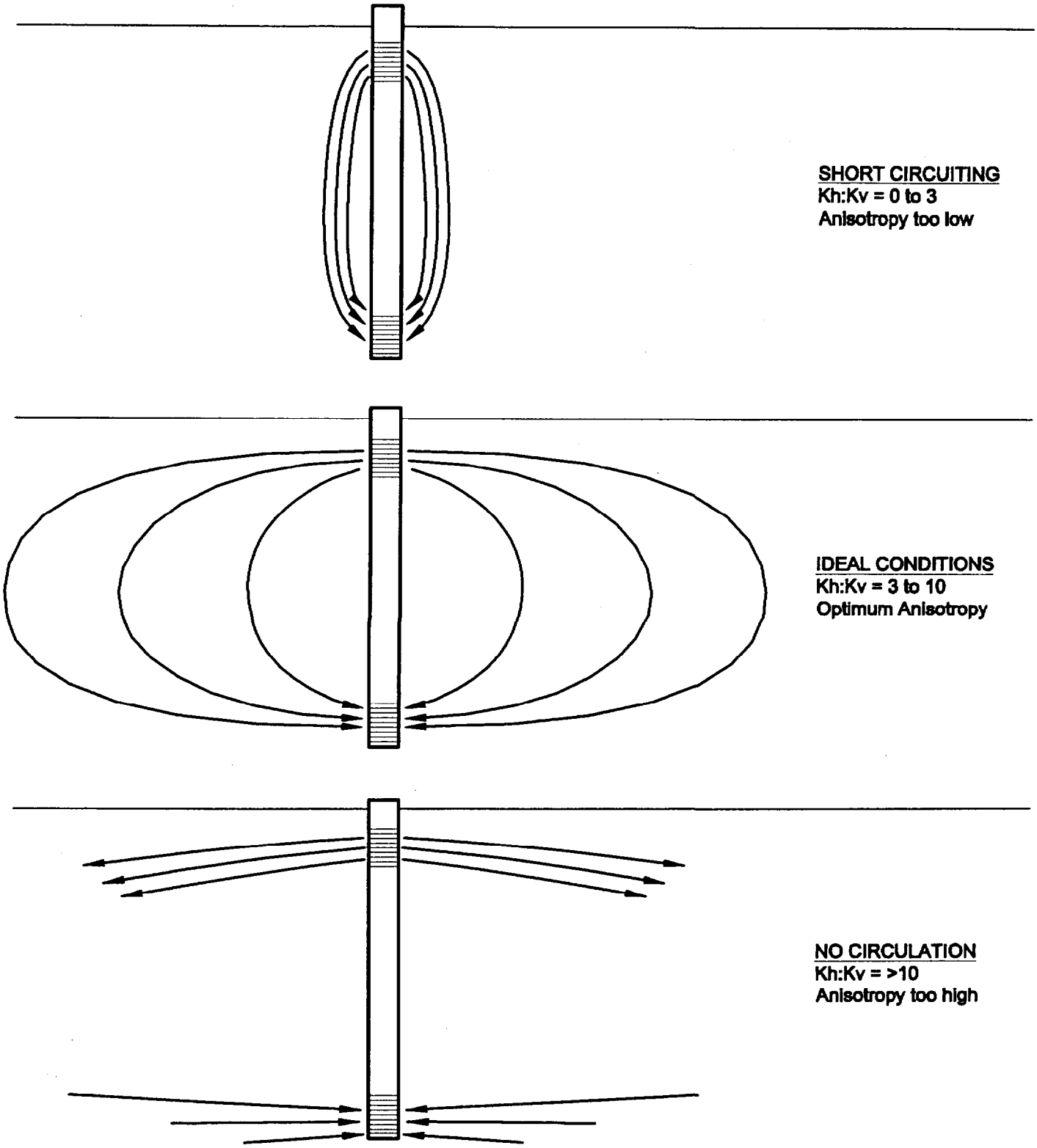

ARCADIS
GERAGHTY&MILLER

CONCEPTUAL DIAGRAMS SHOWING EFFECTS OF ANISOTROPY ON GCW CIRCULATION GEOMETRY

FIGURE
8

DATE: 09/01/1999 17:51 | PRJ#: SB 80.01 | DRAWING: drawings\sb\ANISOTROPY | CHECKED: ALLMON | APPROVED: ALLMON | DRAFTER: STILES

6.0 SITE SCREENING

Emphasized in the foregoing discussions is the fact GCW will not be applicable at many or even most sites. Therefore, a fairly rigorous screening process should be undertaken by those considering GCW for a particular site. This section lists and briefly describes some of the important site characteristics that should be included in a formal screening process.

Table 6 generalizes the applicability of the GCW technology for a range of scenarios. The applicability ratings should only be used as a guide toward the development of a formal screening process. The actual potential for success is dependent on many site-specific conditions and all of these must be taken into consideration before making a decision to proceed with any remedial technology. It is important to remember that even if the GCW technology has been proven successful at one site, the results from that installation cannot be directly translated into the successful potential for any other site. When considering using the GCW technology, one should carefully go through a formal decision process to determine if the GCW technology has potential for application at their specific site.

Contaminant Type

The first consideration in determining if GCW technology is suitable for remediating a site is whether or not the contaminant can be moved to the well for treatment or destroyed or degraded in the aquifer. Table 2 (given in Section 3) is a list of common environmental contaminants that are potential candidates for GCW treatment. The list was developed from the vendor-provided information discussed in Section 3. The table provides a general indication of the maturity of the GCW technology for treating each contaminant based on the number of GCW applications. According to this vendor-based information, all of the listed contaminants, or contaminant groups have successfully removed by GCW. The listing of 3-ring PAHs is an exception to this in that GCW was only marginally effective in the removal at the site where it was targeted. The information in the table should be reviewed with the understanding that these are generalizations based on current information and that the application of GCWs is contaminant-, site-, and cleanup strategy-dependent. A specific hierarchy of contaminants amenable to GCW treatment is not presented here because the physical and chemical effects of any particular site's groundwater and aquifer materials can play a significant role in GCW's effectiveness. As highlighted in the preceding pages, the chemical nature of the target contaminants need to be considered in the context of these factors when evaluating the potential effectiveness of GCW at a site.

Contaminant Distribution

Subsurface contamination is found in any of four phases: dissolved phase, sorbed phase, vapor phase, and free phase. Typically, GCW systems are appropriate for dissolved-phase contaminants, which are more readily transported to the well and sorbed phase contaminants which can be desorbed by GCW influence. Once a contaminant is moved to the well, it can be removed from the dissolved phase through any of several treatment processes.

Residual contamination is often present in the vadose zone at sites with contaminated groundwater. GCW systems are available that simultaneously remediate this residual in the vicinity of the well. This is accomplished by pulling a vacuum on the head of the well or by coupling SVE or bioventing to the GCW system. Soil vapor extraction volatilize sorbed-phase contaminants in the vadose zone and removes vapors for aboveground treatment.

Free-phase contamination can present challenges for GCW systems. GCW systems are generally not suitable for removing free-phase LNAPLs floating at the water table interface, and unless the GCW system can remove 100 percent of the free-phase liquid on its first pass through the well, the circulation system will smear the contaminant throughout the treatment cell. However, free phase and sorbed DNAPL and LNAPLs (gasoline trapped below the water table in finer grained lenses for example) that are recalcitrant with respect to other to removal methods may be removed by the vertical flow induced by GCW. Obviously, when considering NAPL removal by GCW at a given site, consideration should be given to the weight of potential problems in the context of the technology's benefits. Notwithstanding such potential disadvantages, and as discussed in Section 5, such source area or hotspot applications represent an important potential niche for GCW.

Table 6. Generalized Applicability of GCW Technology.

	Applicability
Contaminant Type	
Volatile organic compound (VOC)	✓✓✓
Semi-volatile organic compound (SVOC)	✓✓
Metals	✓
Radionuclides	✓
Clean-up Strategy	
Source treatment	✓✓✓
Plume reduction	✓✓
Plume interception	✓
Unsaturated Thickness	
0 - 5 ft	✓
5 - 1,000 ft	✓✓
Saturated Thickness	
0 - 5 feet	✓
5 - 115 feet	✓✓
>115 feet	✓
Aquifer Characteristics	
Porous media	✓✓
Fractured media	✓
Karst	✓
Background Flow Velocity	
Low (e.g., >0.001 ft/d)	✓✓✓
Medium (e.g., 0.001-1 ft/d)	✓✓
High (e.g., >1 ft/d)	✓
Horizontal Hydraulic Conductivity	
Moderate (e.g., 0.03 – 1 ft/d)	✓✓
High (e.g., >1ft/d)	✓✓✓
Ratio of the Horizontal to Vertical Hydraulic Conductivity	
Anisotropic (H:V 3 – 10)	✓✓
Highly Anisotropic (H:V >10)	✓
Aquifer chemistry	
High iron in water	✓
High calcium in water	✓
High magnesium in water	✓

Key:

✓✓✓	Good potential for success
✓✓	Moderate potential for success
✓	Limited or no potential for success

Cleanup Strategy

It is important to develop a comprehensive cleanup strategy before choosing any remediation technology. The primary objective should focus on the protection of human health and the environment. Also fundamental to an effective cleanup is the removal of the hotspot or source of the contamination in the soil and/or groundwater near where the contaminant entered the ground. This is known as source term reduction. The residual contamination acts as a source that continues to disperse in the environment if left untreated. Removal of the source often provides the most protection to the environment and is the most effective use of cleanup dollars. Other strategies include plume interception, hydraulic containment, well head treatment, intrinsic remediation, or no-action. The particular cleanup strategy employed is site- and situation-specific and is generally based on protection of human health and the environment, effectiveness, and cost.

The characteristics of GCW systems make them potentially well suited for source term reduction because of their 1) potential effectiveness in cleaning up relatively high concentrations of contaminant, 2) the potential "flushing" created by inducing a vertical gradient across layers of lower permeability, thereby reducing residual contamination, and 3) relatively limited zone of influence.

A primary advantage of GCW systems is that the circulation cell created in the subsurface establishes a vertical gradient that directs flow vertically across lower permeability zones that often contain a significant percentage of the contamination. In pump-and-treat systems, water is preferentially pulled in horizontally from the higher permeability zones and the contamination in the lower permeability layers is not substantially addressed. By not affecting the contamination in the lower permeability zones, the contaminant continues to diffuse out of these sediments over time, creating a diffusion-limited problem that can result in long cleanup times. Although not fully proven, it is likely that if flow flushes vertically through these lower permeability zones, the cleanup time could be significantly reduced.

GCWs have been used for dilute plume reduction and interception purposes, however as discussed, will generally not be cost effective as compared to other technologies because of ROI limitations. Where hydraulic containment is the goal, GCW should not be considered in that its dynamics do not create an effective hydraulic barrier.

Hydrogeologic Considerations

The most critical factor that influences the operation of a GCW system is the geological setting in which it is installed. The circulation cell that is driven by the GCW system is an in situ process, and the surrounding environment has the greatest influence over its development and flow characteristics. Therefore, to effectively design, install, and operate any GCW system, an adequate evaluation of the hydrogeologic environment must be conducted.

In unconfined aquifers, the thickness of the vadose zone has a direct impact on the selection and applicability of GCW systems. The thickness of the vadose zone must be sufficient to permit the recharge of the circulated groundwater and to provide sufficient vapor residence times

for systems that discharge the system off-gas for treatment in the vadose zone. The required thickness will vary depending on the specific GCW configuration, the permeability of the treatment zone, the groundwater pumping rate, and the air flow rate. In general, the vadose zone should be at least 10 feet thick for most GCW applications; however, GCWs can be applied at sites with a thinner vadose zone provided that circulated groundwater can be recharged without mounding to the surface. There are also system modifications that can be incorporated into certain GCW designs to allow application in shallow vadose zone settings. A vadose zone thickness of 30 feet or more is optimum for most GCW applications. This thickness allows for maximal circulation of groundwater as well as optimal design and operation of auxiliary systems, including either SVE or bioventing. Very thick vadose zones (i.e. deep groundwater) represent potential specialty niche for GCW application based on its potentially low relative cost as compared to those of electrical pumping.

The saturated zone thickness is the distance between the water-table surface and the bottom of an aquifer. It is usually determined during well installation or other drilling activities when the depth to the bottom of the aquifer can be measured. The saturated thickness must be sufficient to accommodate the physical dimensions of the GCW. In air stripping GCW systems, the contact time of the air with the water must be maximized to facilitate stripping. In some well designs, this requires the casing length to be long enough to allow volatile compounds to partition into the vapor phase. The depth to the aquifer is not as critical as the saturated thickness as far as the groundwater circulation is concerned. However, because GCWs don't lift water to the surface for treatment, the relative energy savings of a vapor stripping system may actually increase with depth, compared to pump-and-treat systems. Such potential savings, however, might not be realized if many more GCW installations are needed to treat the impacted zone as compared to a pump and treat configuration.

The most important site geologic characteristics that will affect the operation of the GCW are the horizontal and vertical hydraulic conductivities. In general, GCW installations are most effective at sites with horizontal hydraulic conductivities greater than 10^{-3} cm/sec. Sites characterized with horizontal conductivities between 10^{-3} cm/sec and 10^{-5} cm/sec are potential candidates, and the decision process should proceed to the next step. For unconsolidated porous media, this range of conductivity would comprise silty sands or coarser sands and gravel. Consolidated media include sandstones, limestones, and fractured igneous and metamorphic rocks. Selection or rejection of the GCW technology at these sites may depend on other site characteristics. It should be kept in mind that a lower hydraulic conductivity will result in a smaller ROI and may require more wells. Application at sites with hydraulic conductivities less than 10^{-5} cm/sec is not recommended.

The ratio of the horizontal to vertical hydraulic conductivities (K_H:K_V) is a measure of the anisotropy of the site. The vertical hydraulic conductivity is always lower than the horizontal hydraulic conductivity in stratified or layered formations. The primary cause of anisotropy on a small scale is the orientation of clay minerals in sediments and unconsolidated rocks (Freeze and Cherry, 1979). For the application of a GCW system, an overall ratio of the horizontal to vertical hydraulic conductivity, or anisotropy, should be in the range of 3 to 10. Sites with lower ratios may be candidate sites but the dimensions of the circulation cell will tend to round and the ROI will approach the distance between the intake and reinjection screens. Sites characterized with ratios greater than 10 could run a substantial risk of not circulating the water due to the increased resistance to vertical flow. The net result will likely be horizontal flow to the intake screen and horizontal flow from the reinjection screen. Many, if not most sites will fall into this category and

therefore be marginal candidates for an effective GCW approach. Sites with ratios approaching 100 or greater should be excluded from consideration.

Because of this sensitivity to vertical flow impedance by stratification, all sites where GCW is contemplated for use should be thoroughly characterized regarding stratigraphy including several continuous core holes. The extracted core samples should be examined in minute detail and all horizontal layers, no matter how thin, logged. After representative lower permeability layers are permeability tested, a calculation of the overall vertical hydraulic conductivity should be made. In this way a good estimate of the actual anisotropy can be obtained.

Background groundwater velocity refers to the natural speed that the groundwater is moving through an aquifer past a GCW. Depending on the application, GCW systems can be employed over a range of background groundwater velocities. At sites where groundwater is stagnant or moving very slowly, GCWs may prove effective for source reduction. Under this scenario, the system is designed so that the total zone of influence covers the zone requiring treatment. The circulation of the groundwater is the only mechanism for transporting the contaminant to the well, or for delivering oxygen, nutrients, or other compounds to the aquifer. The maximum background flow velocity of the groundwater needs to be in the range of the system's ability to capture the contamination, and in most cases to allow multiple passes in the well before it moves downgradient. The ability of the GCW to capture the groundwater will be related to the pumping rate of the well. On the other hand, when a purpose of a GCW is for a barrier, the minimum background flow velocity needs to be sufficient to prevent stagnation around the well, enough water needs to be moving past and through the system to carry the clean water downgradient and deliver impacted groundwater to the recirculation zone on the upgradient side. Although not brought out in most of the provided detailed case histories, the relationship of background groundwater flow velocity to induced circulation velocity may have had detrimental effects to the efficacy of these systems. Future demonstration programs should consider these effects during design and chart them during operation.

Finally, the geochemistry of the target zone aquifer should be investigated for compatibility with GCW systems during the screening process. The DO depletion and other geochemical effects that are often induced by GCW systems can cause precipitants that will negatively impact flow rates and systems performance by plugging the discharge screen, adjacent sand pack and formation. Common precipitates are iron, calcium and manganese. While treatments are available they add cost and only prolong the eventual diminished flow rates caused by plugging.

Decision Summary

The decision to proceed with GCW implementation should proceed only after all of the items discussed in the preceding sections have been considered. If all of the criteria are met and no concerns raised, the technology should be considered. If for any reason the technology did not meet any of the described criteria, it should be dropped from consideration and an alternative technology should be pursued. Otherwise, the risks associated with proceeding with the technology will be too high and the potential for a failed application too great. GCW systems are much more complex than conventional pump-and-treat systems, and although GCWs offer several distinct advantages, their installation and even pilot-scale testing can be expensive, so there must be a significant level of confidence that the technology will work at a given site for its application to be beneficial and cost-effective.

7.0 REFERENCES

7.1 REFERENCES CITED

Ballard, S. 1996. "In Situ Permeable Flow Sensor: A Groundwater Flow Velocity Meter" *Groundwater* 34: 231-234

Bannon, J.L., J.G. Sontag, J.R. Sabol, and M.T. Dominick. 1995. "In situ Groundwater Remediation: Pilot Study of the UVB-Vacuum Vaporizer Well, March Air Force Base, California." Presented at the 88th Annual Meeting of the Air & Waste Management Association, San Antonio, TX, June.

Battelle. 1995. Final Report on In-Well Air Stripping/Bioventing Study at Tyndall Air Force Base, Florida. Prepared by Battelle Columbus Operations for Environics Directorate, Tyndall AFB, FL.

Battelle. 1998. Groundwater Circulating Well Assessment and Guidance. Report prepared for the U.S. Department of Defense, Environmental Security Technology Certification Program.

Bird, R.B., W.E. Steward, and E.N. Lightfoot. *1960. Transport 8/5Phenomenon.* John Wiley and Sons, Inc., New York, N.Y.

Brady, N.C. 1974. The Nature and Properties of Soils. MacMillow Publishing Co., Inc. New York.

CH2MHILL, Inc. 1997. Final Report on the Pilot Test of the NoVOCs In situ Aeration Technology of RCRA SWMU 24 Oceana Naval Air Station Virginia Beach, Virginia. Report prepared for the U.S. Department of the Navy, Atlantic Division Naval Facilities Engineering Command.

Connolly, M., B. Gibbs, and B. Keet. 1995. "Bioslurping Applied to a Gasoline and Diesel Spill in Fractured Rock." In R.E. Hinchee, J.A. Kittel, and H.J. Reisinger (Eds.), *Applied Bioremediation of Petroleum Hydrocarbons*, pp. 371-377. Battelle Press, Columbus, OH.

Francois, O., T. Gilmore, M.J. Pinto, and S.M. Gorelick. 1996. "A Physically Based Model for Air-Lift Pumping." *Water Resources Research*, 32(8): 2383-2399.

Freeze, R.A. and J.A. Cherry. 1979. Groundwater. Prentice Hall, Englewood Cliffs, NJ.

Gilmore, T.J., M.J. Pitino, M.D. White, S. Ballard, S.M. Gorelick, O.Taban, and F.A. Spane, Jr. 1996. Performance Assessment of the In-Well Vapor Stripping System. PNNL-11414, Pacific Northwest National Laboratory, Richland, Washington.

Herrling, B., J. Stamm, E.J. Alesi, P. Brinnel, F. Hirschberger, M. R. Sick. 1991b. "In situ Groundwater Remediation of Strippable Contaminants by Vacuum Vaporizer Wells (UVB): Operation of the Well and Report about Cleaned Industrial Sites." Presented at the Third Forum on Innovative Hazardous Waste Treatment Technologies: Domestic and International. Dallas, TX. Sponsored by U.S. EPA.

Herrling, B., J. Stamm, and W. Buermann. 1991a. "Hydraulic Circulation System for *In situ* Bioreclamation and/or *In situ* Remediation of Strippable Contamination." In R.E. Hinchee and R.F. Olfenbuttel (Eds.), *In situ Bioreclamation,* pp. 173-195. Butterworth-Heinemann, Boston, MA.

Jacobs Engineering Group Inc. 1996. Final CS-10 Recirculating Well Pilot Test Execution Plan. Report prepared by Jacobs Engineering Group Inc., for the Air Force Center for Environmental Excellence, Brooks Air Force Base, TX, and the Massachusetts Military Reservation Installation Restoration Program, Otis ANGB, MA.

Jacobs Engineering Group Inc. 1997. Recirculating Well Pilot Tests for CS-10, System Evaluation. Report prepared by Jacobs Engineering Group Inc., for the Air Force Center for Environmental Excellence, Brooks Air Force Base, TX, and the Massachusetts Military Reservation Installation Restoration Program, Otis ANGB, MA.

Maasland, M. 1957. Drainage of Agricultural Lands, ed. J.N. Luthin. American Society of Agronomy, Madison, Wisconsin.

Montgomery, J.H. and L.M. Welkom. 1990. Groundwater Chemicals Desk Reference. Lewis Publishers, Chelsea, MI.

Montgomery, J.M. 1985. Water Treatment Principles and Design. John Wiley and Sons, New York, NY.

Oster, J.D., M.J. Singer, A. Fulton, W. Richardson, and T. Prichard. 1992. Water Penetration Problems in California Soils. Kearney Foundation of Soil Science, Division of Agriculture and Natural Resources, University of California.

Parsons Engineering Science, Inc. 1997a. Groundwater Circulation Well (GCW) Technology, also known as Recirculation Well Technology (RWT) Evaluation. Report Prepared by Parsons Engineering Science for the Air Force Center for Environmental Excellence, Brooks Air Force Base, TX.

Parsons Engineering Science, Inc. 1997b. Addendum to Groundwater Circulation Well Technology at the Masachusetts Military Reservation (MMR) on Cape Cod, Massachusetts dated June 1997. Report Prepared by Parsons Engineering Science for the Air Force Center for Environmental Excellence, Brooks Air Force Base, TX.

Philip, R.D. and G.R. Walter. 1992. "Prediction of Flow and Hydraulic Head Fields for Vertical Circulation Wells." *Groundwater,* 30(5):765-773.

Radian Corporation. 1997. Technology Performance and Application Analysis of UVB Groundwater Circulating Well Technology. Report Prepared by Radian Corporation for Hill Air Force Base, Utah.

Schrauf, T.W. and L.H. Pennington. 1996. *Design and Application of an Alternative Groundwater Sparging Technology.*

Spargo, B.J. 1996. In situ Bioremediation and Efficacy Monitoring. Naval Research Laboratory, Washington D.C. Report No. NRL/PU/6115-96-317.

Stallard, W.M., K.C. Wu, N. Shi, and M.Y. Corapcioglu. 1996. "Two-Dimensional Hydraulics of Recirculating Ground-Water Remediation Wells in Unconfined Aquifers." *Journal of Environmental Engineering*, (August):692-699.

Tetra Tech EM, Inc. 1997. Draft Dye Trace Study Plan for the EG&G Environmental NoVOCs™ Technology Evaluation at Naval Air Station North Island, California. Report prepared for U.S. Environmental Protection Agency, Technology Innovation Office.

Wasatch Environmental, Inc. 1997. Draft Final Report: DDC In-Well Aeration Technology Demonstration, Keesler Air Force Base, Biloxi, Mississippi. Report Prepared by Parsons Engineering Science for the Air Force Center for Environmental Excellence, Brooks Air Force Base, TX.

White, M.D., and T.J. Gilmore. 1996. Numerical Analysis of the In-Well Vapor-Stripping System Demonstration at Edwards Air Force Base. PNNL-11348, Pacific Northwest National Laboratory, Richland, Washington.

7.2 REFERENCES CONSULTED BUT NOT CITED

AFCEE/ERT. 1998. Position Paper on Groundwater Circulation Wells (GCW).

Battelle. 1996. Preliminary Performance Assessment In-Well Vapor Stripping System. Report prepared by Battelle Pacific Northwest National Laboratory for the U.S. Department of Energy.

Buermann, W. and G. Bott-Breuning. 1994. "Bioremediation by Groundwater Circulation Using the Vacuum-Vaporizer Well (UVB) Technology: Basics and Case Study." In R.E. Hinchee (Ed.), *Air Sparging for Site Remediation*. pp. 97-107. Lewis Publishers, Ann Arbor, MI.

Clean Sites, Inc. 1998. Revised Work Plan Draft NoVOCs Pilot Test, Naval Air Station - North Island. Report prepared for U.S. Department of the Navy. Environmental Leadership Program.

Clean Sites, Inc. NoVOCs In-Well Stripping Technology Applicability and Current Status.

Fetter, C.W. 1994. Applied Hydrogeology. 3rd Edition. Merrill Publishing Company, Columbus, OH.

Gvirtzman, H. and S.M. Gorelick. 1992. "The Concept of In situ Vapor Stripping for Removing VOCs from Groundwater." *Transport in Porous Media*, 8(1):71-92.

Gvirtzman, H. and S.M. Gorelick. 1993. "Using Air-Lift Pumping as an In situ Aquifer Remediation Technique." *Wat. Sci. Tech.*, *27*(7-8):195-201.

Herrling, B. and J. Stamm. 1992. "Numerical Results of Calculated 3D Vertical Circulation Flows around Wells with Two Screen Sections for In situ or On-Site Aquifer Remediation." In T.F. Russell, R.E. Ewing, C.A. Brebbia, W.G. Gray, and G.F. Pinder (Eds.), *Computational Methods in Water Resources IX, Vol. 1,* pp. 483-493. Computational Mechanics Publications, Boston, MA.

Herrling, B., J. Stamm, E.J. Alesi, G. Bott-Breuning, and S. Diekmann. 1994. "In situ Bioremediation of Groundwater Containing Hydrocarbons, Pesticides, or Nitrate Using the Vertical Circulation Flows (UVB/GZB Technique)." In R.E. Hinchee (Ed.), *Air Sparging for Site Remediation*, pp. 56-80. Lewis Publishers, Ann Arbor, MI.

Johnson Division. 1975. Ground Water and Wells. Saint Paul, MN.

Kabala, Z.J. 1993. "The Dipole Flow Test: A New Single-Borehole Test for Aquifer Characterization." *Water Resources Research*, 29(1):99-107.

Klute, A. 1965. "Laboratory Measurement of Hydraulic Conductivity of Saturated Soil." In C. A. Black, D.D. Evans, J.L. White, L.E. Ensminger, F.E. Clark, and R.C. Dinauer (Eds.), Methods of Soil Analysis: Part 1 - Physical and Mineralogical Properties, Including Statistics of Measurements and Sampling, pp. 210-221. American Society of Agronomy, Madison, WI.

Lin, H.J., D.R. Richards, G. Yeh, J. Cheng, H. Cheng, and N.L. Jones. 1996. *FEMWATER: A Three-Dimensional Finite Element Computer Model for Simulating Density Dependent Flow and Transport.* U.S. Army Environmental Center and Office of Research and Development, U.S. Environmental Protection Agency. (Incorporated in U.S. Department of Defense Groundwater Modeling System [GMS]).

McCaulou D.R., W.T. Weinig, and G.R. Walter, 1995. "Evaluation of Vertical Circulation Wells for Enhanced Bioremediation." In R.E. Hinchee, R.N. Miller, and P.C. Johnson (Eds.), *In situ Aeration: Air Sparging, Bioventing, and Related Remediation Processes,* pp 495-501. Battelle Press, Columbus, OH.

Morrison, G.L., T.I. Zeineddine, M. Henriksen, and G.B. Tatterson. 1987. "Experimental Analysis of the Mechanics of Reverse Circulation Air Lift Pump." *Ind. Eng. Chem. Res.,* 26(2): 387-391.

Pinder, G.F. and L.M. Abriola. 1982. "Calculation of Velocity in Three-Space Dimensions from Hydraulic Head Measurements." *Groundwater*, 20(2): 205-209.

Powers, J.P. 1992. Construction Dewatering: New Methods and Applications. Wiley, New York, NY.

Schrauf, T.W., P.J. Sheehan, L.H. Pennington. 1993. "Alternative Method of Groundwater Sparging for Petroleum Hydrocarbon Remediation." *Remediation.* Winter 1993/1994. pp. 93-113.

Sick, M. R., E. J. Alesi, and G. Bott-Breuning. *In situ Biological Remediation of Groundwater Contaminated with Triazine Pesticides Using the UVB-Technology..*" IEG - Technologies Corporation.

Sick, M.R., E. Alesi, S. Borchert, and R. Klein. Directed Soil Air Circular Flow (BLK) for the Remediation of CHC-Contaminated Industrial Sites. IEG - Technologies Corporation.

Stamm, J. 1995. "*Vertical Circulation Flows for Vadose and Groundwater Zone In situ (Bio-) Remediation.*" In R.E. Hinchee, R.N. Miller, and P.C. Johnson (Eds.), *In situ Aeration: Air Sparging, Bioventing, and Related Remediation Processes.* Battelle Press, Columbus, OH.

U.S. Environmental Protection Agency. 1991. Soil Vapor Extraction Technology: Reference Handbook. Office of Research and Development, Risk Reduction Engineering Laboratory, Cincinnati, OH. EPA/540/2-91/003.

U.S. Environmental Protection Agency. 1994. VISITT-Vendor Information for Innovative Treatment Technologies. EPA/542-R-94-003. Solid Waste and Emergency Response, Washington, D.C.

U.S. Environmental Protection Agency. 1995. Site Technology Capsule: Unterdruck-Verdampfer-Brunnen Technology (UVB) Vacuum Vaporizing Well. EPA Report No. EPA/540/R-95/500a.

Wehrle, K. and J. Brauns. 1994. "Groundwater Circulation Due to Air Injection: General Aspects and Experimental Results for Layered Subsoil." In R.E. Hinchee (Ed.), *Air Sparging for Site Remediation,* pp. 120-127. Lewis Publishers, Ann Arbor, MI.

Wilson, L.G., L.G. Everett, and S.J. Cullen, editors 1995. Handbook of Vadose Zone Characterization and Monitoring. Lewis Publishers, Chelsea, MI.

Wright, J.V. and J.L. Conca. 1994. Hydrostatigraphy and Recharge Distributions from Direct Measurements of Hydraulic Conductivity Using the UFA Method. PNL-9424, Pacific Northwest National Laboratory - Battelle Memorial Institute, Richland, WA.